view | Dynamic Glass

View Display™ Installation Manual

Contents

SAFETY 3
- IMPORTANT 4
- UNCRATING INSTRUCTIONS 4

1 SITE DESIGN AND PRE-INSTALLATION INSPECTION 6
2 Required Tools & Materials 10
3 Receiving, Uncrating and Inspecting 11
4 SYSTEM INSTALLATION 17
5 Final System Connections (Refer to APPENDIX A) 47
6 Connect the Display Controller to the Source Computer (Refer to APPENDIX A) 47
7 Powering on and setting up. 47

SAFETY

- **CAUTION: TO REDUCE THE RISK OF ELECTRIC SHOCK, DO NOT REMOVE COVERS. NO USER-SERVICEABLE PARTS INSIDE. REFER SERVICING TO QUALIFIED SERVICE PERSONNEL.**
- **CAUTION – These instructions are for use by qualified service personnel only. To reduce the risk of electric shock, do not perform any service other than that contained in the operating instructions unless you are qualified to do so.**
- **CAUTION - This product is for Indoor Use Only.**
- **CAUTION - To reduce the risk of fire or electric shock, do not expose this appliance to any form of moisture.**
- All Electrical Grounds must be properly connected.
- All Electrical Power connections must be made by a qualified electrician to a dedicated circuit with proper circuit protection in accordance with local requirements.
- In the presence of an electrical storm (lightning), never touch any cabling for risk of electric shock.
- Do not insert metal or other conductive materials into the product openings.
- Do not block any ventilation openings. Install in accordance with the manufacturer's instructions
- This is a Class A digital device.

Thank you for choosing the View Display™ System! View wants you to be delighted with the experience the View Display™ brings to your space.

This manual describes how to properly install the product and provides safety guidelines and best practices. Please read the manual carefully before attempting to install the product. After reading this manual, please retain for future reference. If you have any questions or a problem occurs, please contact the View Customer Success team.

● IMPORTANT

✔ Displaying static images for an extended period of time on any OLED display may cause a "burn-in" effect.

✔ The "Burn-in" effect and the faults in brightness and picture elements caused by extended display of static images are not subject to warranty coverage.

✔ Please refer to the View Display™ content guide for more information on how to maintain peak performance of your View Display™.

● UNCRATING INSTRUCTIONS

Shipping Dimensions Including Pallet 58"L x 41"W x 50"H. Single unit = 136lbs, 4 units 364lbs

Display Items included:

- ✔ (1) View Display™
- ✔ (1) View Display™ Controller
- ✔ (1) Interconnect Cable Kit
  - (4) 3m Display to Controller Data Cables
  - (2) 3m Display to Controller Power Cables
  - (1) 3m 24V Fan Power Cable
  - (1) 3m TC Extension Cable
  - (1) 3m Ground Cable – Display to Controller
  - (1) 8m Ground Cable – Controller to Facilities Ground
  - (1) 2m Display Port Cable
  - (1) 2m IX IX Cable
- ✔ (1) Mounting Bracket
- ✔ (1) Beauty Cap
- ✔ (1) Hardware Kit
  - (2) Retainer Clips
  - (10) Self tapping screws, #10 x 1" Long
  - (5) Self tapping screws, #6 x 3/4" Long
  - (3) M3 x 6mm Long
  - (5) M2 x 6mm Long
  - (10) M4 x 20mm Long
  - (1) Edge Protection Grommet 3' Long
  - (1) 4mm T3 Torx Bit

- (1) T10 Torx L Key
- (1) 1.5mm Hex L Key
- (1) 2mm Hex L Key
- (1) 4 x 12” Thermal Interface Material

✔ (1) Lifting Harness

Touch Display Items included if applicable:

✔ (1) 3m USB Cable
✔ (2) 3m Touch Power Cable

Trim Kit Items (Separate):

✔ Trim Kit Sheet Metal
✔ (25) Self tapping screws, #6 x 3/4 Long
✔ (25) Self tapping screws, #4 x 3/4 Long
✔ (1) #47 Drill Bit

Power Hub (Separate):

✔ Power Hub
✔ (4) Mounting Screws
✔ (8) Fuses

1 SITE DESIGN AND PRE-INSTALLATION INSPECTION

1.1 Installation location and design planning must be done prior to starting the installation. It may be necessary to modify the framing design in order to properly install and route the cables.

The Site must first be surveyed by a Project Manager using the following Pre-Installation Checklist:

- Take many pictures of the structure, corners, frame, mullion types
- Note if the project is a new construction or a retrofit.
- Measure and record window opening sizes and verify the Exclusions for the Display and Controllers. Measurements must be accurate within +/- 1/16”
- Check all mullions for square, level and plumb.
    - **If any framing is out of square or skewed, it will result in issues with the final appearance and performance. Any issues found at the pre-inspection must be addressed prior to installation.**
- Verify all the cables paths for length and routing interferences for each cable required
    - **Cable routing must be no more than 3m from View Display™ to Display Controller.**
- Check available spaces above (Ceiling), below (Knee Wall) or adjacent to the window opening for Power Hub installation.
- Indicate the orientation of the View Display™ to be installed with respect to the mounting bracket and the mullion that the display will attach to.
- Verify the mullion that the display will mount to is structural for a 40lb load.
- Any high potential high heat, or areas with high air velocity impinging on the display.
- Resolve any moisture, climate conditions, any potential water leaks in the area
- Verify with the Customer the type of content system that will be used and where the system will be located relative to the View Display™ System. If there are long distances, extenders or hubs should be used to minimize signal noise. Work with the customer or contractor to ensure the system design will perform over the distances required.
- If the system will be a Touch enabled system, consider ergonomic heights for interacting with the display.

1.2 The View Display™ is compatible for installations where:

- Mullions that are the following manufacturers and models. Other mullion systems must be reviewed and approved by View Engineering.

Mullion System
Kawneer 1600
Tubelite-400 Series CW
EFCO 8750-Captured CW
YKK YHC SSG CW

- Depth of the mullion is > 3.5”
- Cable paths where the distance from the View Display™ to the Display Controller is less than 9-feet (or 3-Meters) long.
- An external façade installation where a View IGU is installed.

1.3 Verify the opening of the mullion framing meets the View Display™ Day Light Opening Minimum Requirements for the configuration desired:

- **Day Light Opening Requirements for Display Installation**

Day Light Opening (DLO) W x H Inches	No. of Displays	Columns	Rows	Portrait	Landscape
49-1/4 x 29-1/8	1	1	1		✔
29-1/8 x 49-1/4	1	1	1	✔	
49-1/4 x 58-1/16	2	1	2		✔
98-1/4 x 29-1/8	2	2	1		✔
29-1/8 x 98-1/4	2	1	2	✔	
58-1/16 x 49-1/4	2	2	1	✔	
58-1/16 x 98-1/4	4	2	2	✔	
98-1/4 x 58-1/16	4	2	2		✔

Notes: See View Display™ data sheet for multiple Display configurations

1.4 Verify the Display Controller mounting area has enough space including the clearance for cabling and airflow. The Display Controller must be within 3m of cable length from the Controller to the display cable connections. There must be access to 4 sides of the Controller for access to the connectors and indicator LED.

- **Display Controller & Keep-out Opening**

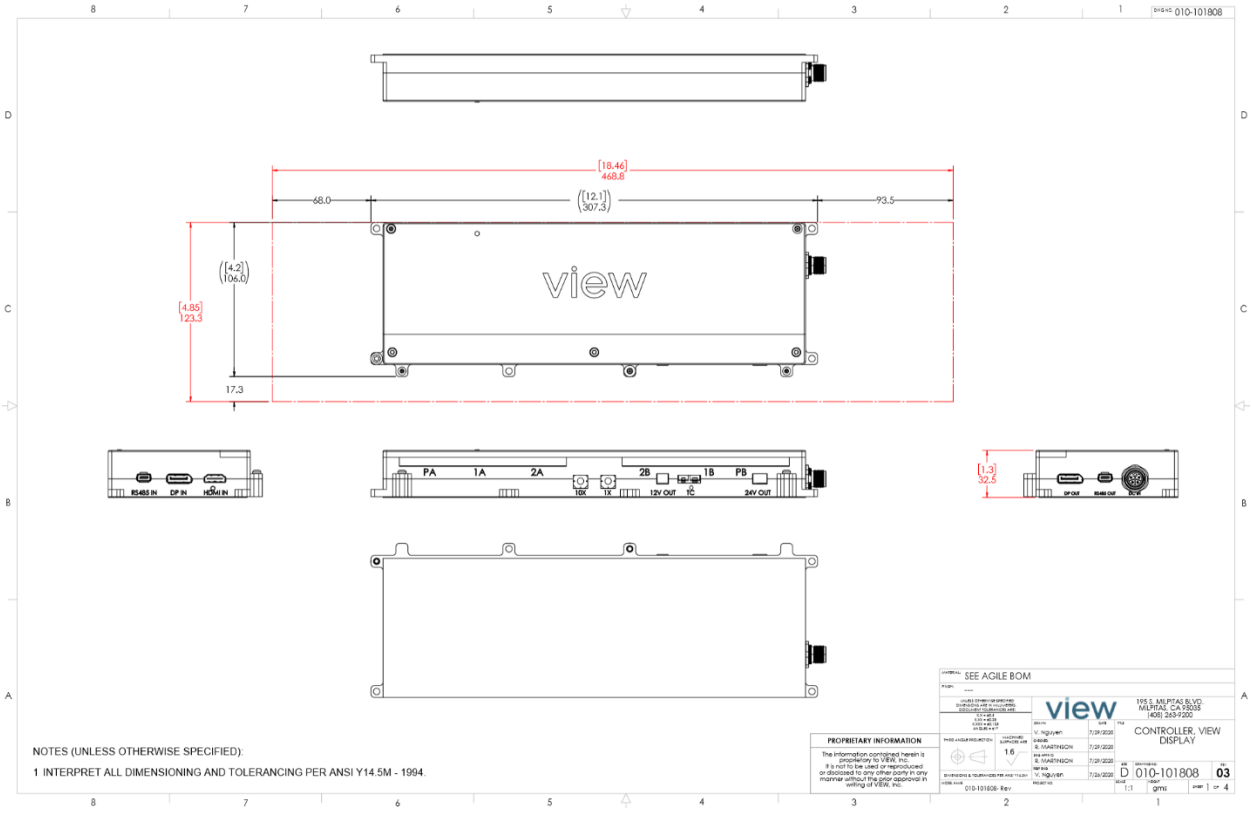

- **Power Hub PS4 & Keep-out Opening**

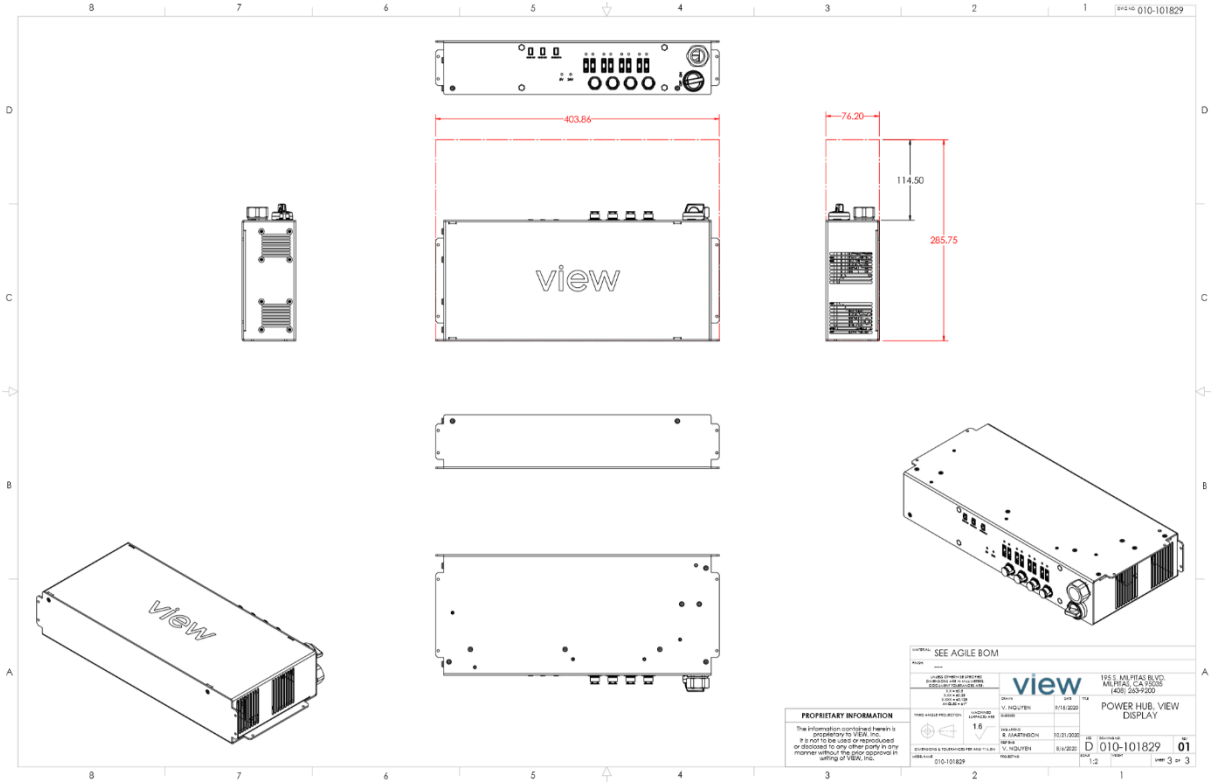

- **Power Hub PS1 & Keep-out Opening**

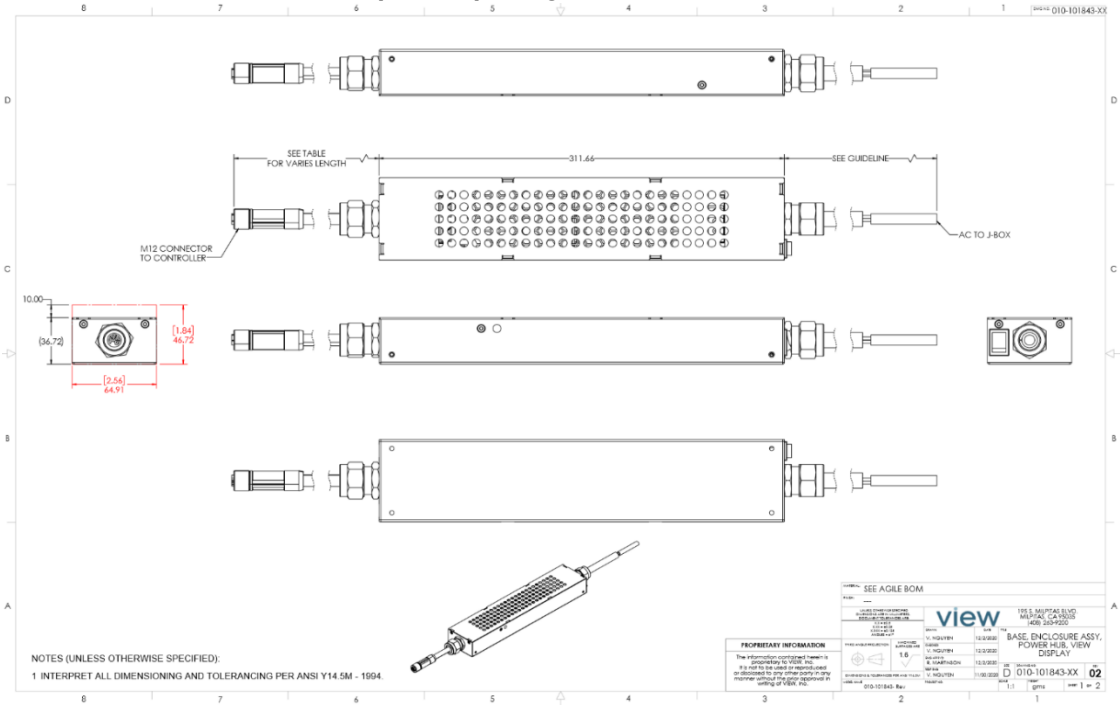

1.5 The Customer is responsible for providing the following prior to the installation:

Dedicated Power Circuit: 120V, 20amp (supports up to 4 Displays). A junction box must be located to meet code. An appropriate conduit connection between the junction box and Power Hub must be installed by an electrician. Earth grounding must meet local code.

Signals from the Content Computer to Display Controller: (1) HDMI or DP, (1) RS485, and (1) USB Extender for Touch enabled displays.

2 Required Tools & Materials

- Installer(s) should have the following items
  - ✔ Laptop with HDMI Output and Windows 10 OS for setup and testing
  - ✔ Standard USB 2.0 Cables,
  - ✔ HDMI Cable (6 feet long),
  - ✔ Tape Measure
  - ✔ Machinist Square
  - ✔ Digital Calipers
  - ✔ Cordless Drill with Torque Limiting Chuck
  - ✔ Center Punch
  - ✔ 5/32 Drill Bit (for #10 Screws)
  - ✔ 1/8” Drill Bit for Pilot Hole for Step Drill
  - ✔ 1-1/8“ Step Drill Bit
  - ✔ Flat and Round Files for Deburring and forming cut outs
  - ✔ Wire Cutters
  - ✔ #2 Phillips Screwdriver
  - ✔ #3 Phillips Screwdriver
  - ✔ Torque Driver (Range)
  - ✔ 8” Clamps with Cushions
  - ✔ 25’ Nylon Fish Tape Reel
  - ✔ 2” Painters Tape, 1” Kapton Tape
  - ✔ ESD Strap for Grounding
  - ✔ Isopropyl Alcohol and Lint Free Wipes
  - ✔ Drilling Oil (3-IN-ONE or equivalent)
  - ✔ Vacuum Cleaner
  - ✔ 8ft Worktable
  - ✔ Deburring Tool

Special Tools (Procured by LVE/Installer from View)

- ✔ Drill Templates
- ✔ Single Power Hub
- ✔ USB to RS485 Converter and Cables

3 Receiving, Uncrating and Inspecting

3.1 Receiving and Uncrating

3.1.1 Inspecting the shipment

3.1.1.1 Inspect the packaging and contents before accepting the shipment. If any damage is observed to the packaging or contents, contact your View representative immediately to coordinate the return and replacement.

3.1.1.2 Verify package in in good condition

3.1.1.3 Verify that the Temperature, Shock and Tilt Indicators have not been activated. If any have been activated, contact the View Service representative before opening.

3.1.2 Open the Box

To properly open the package

- Remove the four lower clips from the outer package by pulling the tabs

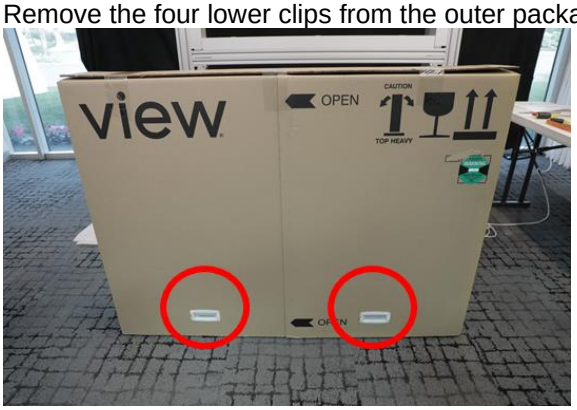

- Lift the box top vertically to expose the display and packaging beneath.

- Remove the top foam connectors by sliding to the right foam to the right and the left to the left.

- Partially remove the outer poly bag to expose the top half of the Display.

- Carefully open the front flap of the lower crate by removing the staples. This will expose the small box with the Display Controller, Cables and Hardware Kit.

3.2 Pre-Installation Functional Test of the Display Unit and Controller:

PRIOR TO BEGINNING THIS PORTION OF THE PROCEDURE, IT IS IMPERATIVE THAT THE COLLEAGUE MAKING THE CONNECTIONS IS PROPERLY GROUNDED USING A GROUNDING STRAP. FAILURE TO GROUND CAN RESULT IN DAMAGE TO THE DISPLAY.

3.2.1 Set up the 8ft worktable next to the display packaging. Open the larger of the 2 boxes, remove the Controller and the bag of cables, and set it on the table close to the Display. When installing multiple displays, be careful to keep the display controller with the associated display as they are pre-programmed to work together. **The serial number on the controller must match the serial number of the display.**

3.2.2 Remove the Controller access door by removing the 3 screws holding it in place. Requires T3 Torx Bit

3.2.3 Connect the cables to the Display Controller. Each cable is labeled with a corresponding location on the controller and must be connected accordingly. (Note: Carefully engage the connection to avoid the connectors being damaged).

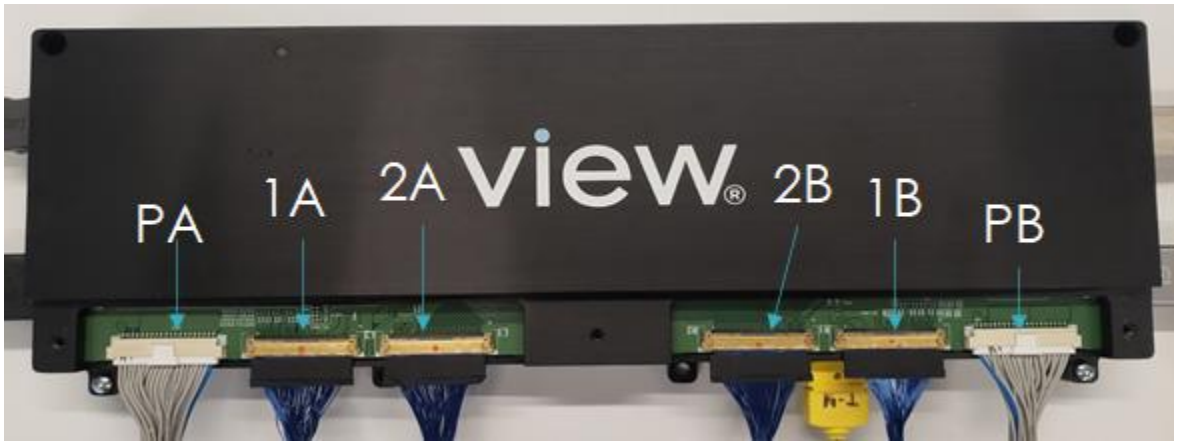

3.2.3.1 Cables 1A, 2A, 2B, and 1B use a latching mechanism. The connection must be made when the latching mechanism is in the upright position. Once the connector is fully

seated, rotate the latch until it clicks into place. The latch is secure when the clip is rotated to be parallel with the connector end.

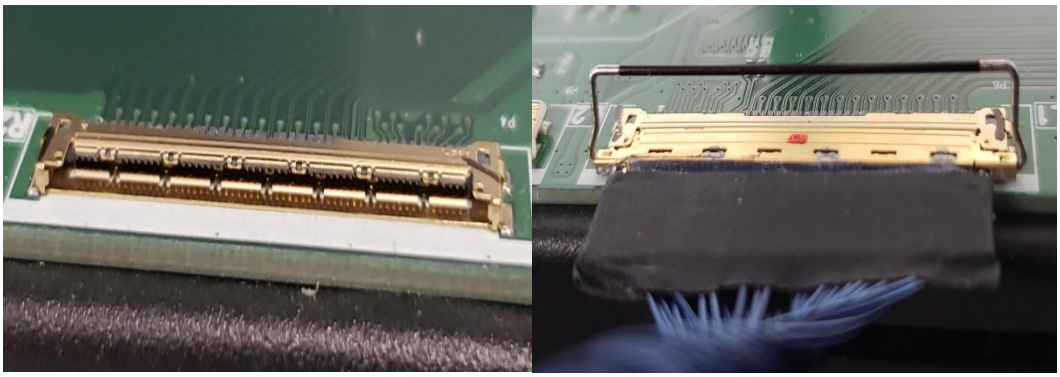

3.2.3.2 Connect the PA and PB connectors. Align connector key with the socket and GENTLY push connector into the socket until the latch snaps in place.

3.2.4 Connect the cables to the Display one at a time. Each cable is labeled with a corresponding location on the Display top bracket and must be connected accordingly. (Note: Carefully engage all connections to avoid the connectors being damaged).

3.2.4.1 Cables 1A, 2A, 2B, and 1B use a latching mechanism. The connection must be made when the latching mechanism is in the upright position. Once the connector is fully

seated, rotate the latch until it clicks into place. The latch is secure when the clip is rotated to be parallel with the connector end.

3.2.4.2 Connect the PA and PB connectors. Align connector key with the socket and GENTLY push connector into the socket until the latch snaps in place.

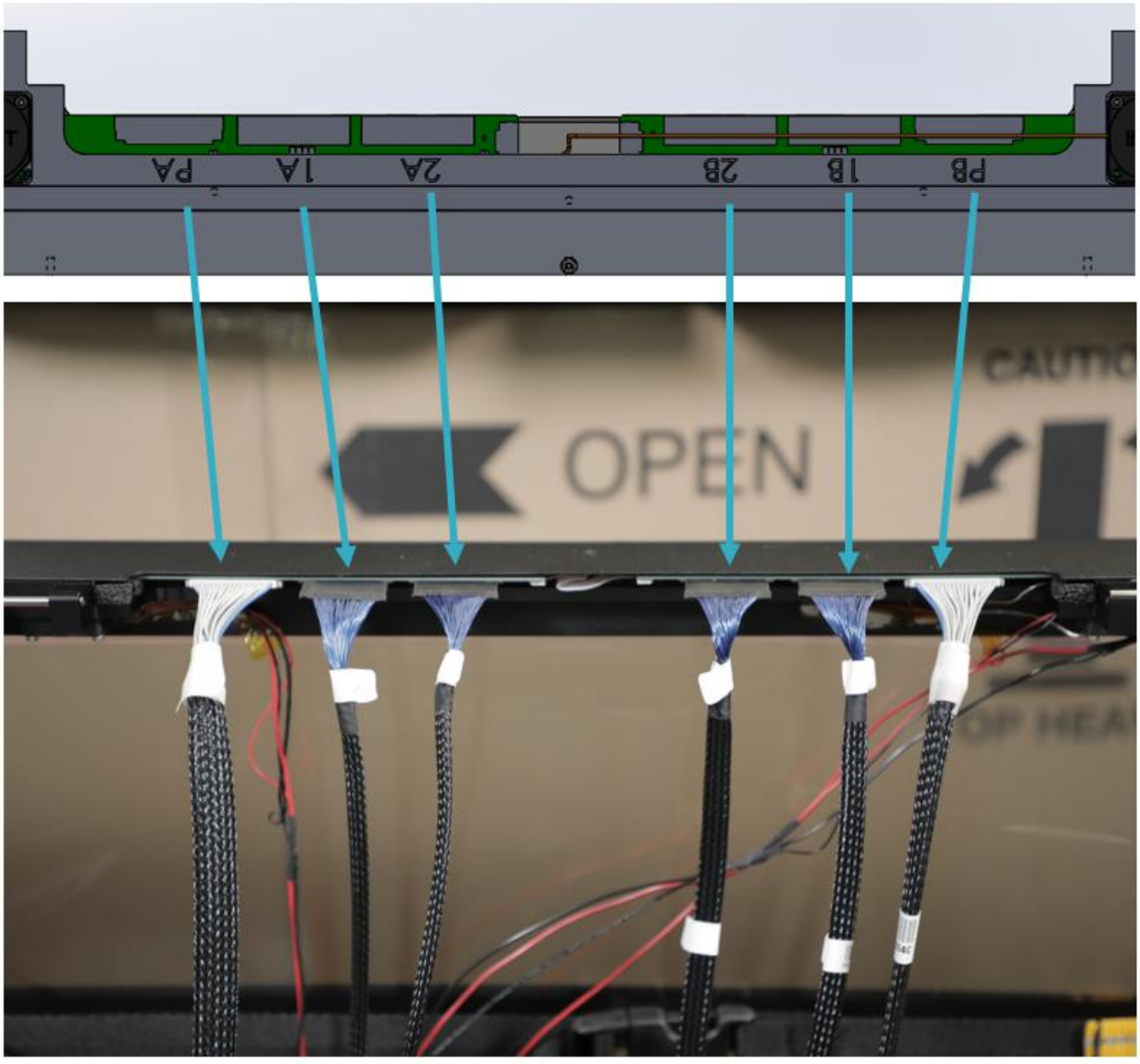

3.2.5 Using a stand-alone PS1 Power Hub connect the M12 connector cable to the Controller and lock in place. Connect the 3-prong plug to the wall outlet. Wait for 5 seconds. The LED should turn to solid blue and the View logo should appear on the Display screen.

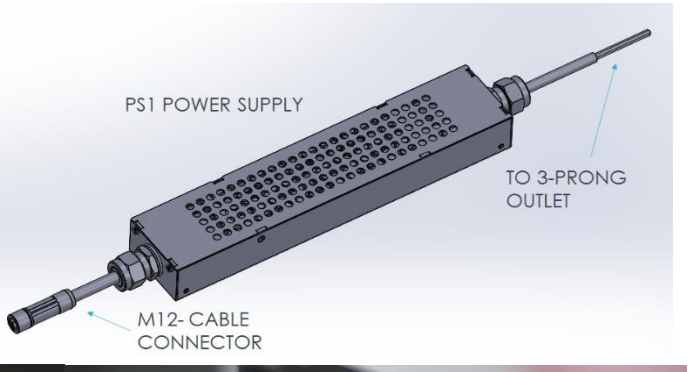

3.2.5.1 If the blue LED doesn't come on, verify that all the cables are going to the correct corresponding outlets: 2A cable should be connect to the 2A location on the Display and the 2A location on the Controller, etc.

3.2.6 After the VIEW logo appears on the Display, unplug the PS1 Power Hub from the wall outlet, and begin carefully removing the cables from the Display.

3.2.6.1 For connections 1A, 2A, 1B and 2B, ensure that the latch is released in the up-right position. ENSURE THAT THE CABLE IS REMOVED BY PULLING

STRAIGHT BACK. FAILURE TO PULL STRAIGHT BACK WILL DAMAGE THE DISPLAY CONNECTOR!

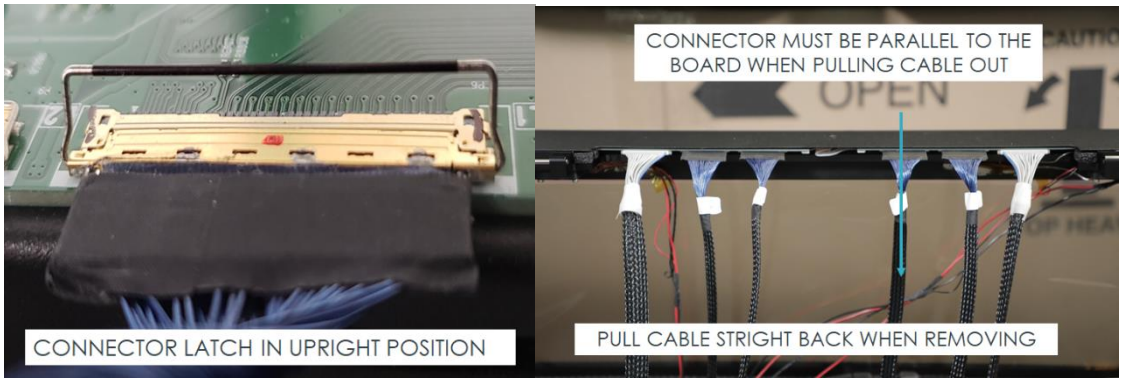

3.2.7 Remove cables from PA and PB locations

3.2.8 Disconnect cables from the CONTROLLER using the same technique outlined in 3.2.61.

3.2.8.1 Ensure that the latch is released in the up-right position. ENSURE THAT THE CABLE IS REMOVED BY PULLING STRAIGHT BACK. FAILURE TO PULL STRAIGHT BACK WILL DAMAGE THE DISPLAY CONNECTOR!

3.2.9 Reinstall the Display Controller access door and put the cables back in the cable bag.

4 SYSTEM INSTALLATION

4.1 Pre-installation measurements

4.1.1 Measure the opening prior to starting installation and verify that the opening meets the requirements in section 1.3. Size of opening will vary depending on the installation configuration.

4.1.1.1 **DLO MUST BE +/- 1/16” OF DIMENSIONS OUTLINED IN TABLE 1.3. IF THE DLO MEASUREMENTS ARE NOT IN SPEC THE MULLION MUST BE CORRECTED!**

4.1.1.2 Verify the vertical and horizontal mullions are LEVEL and SQUARE

-

DO NOT PROCEED IF THE MEASUREMENTS ARE OUT OF SPECIFICATION! CONTACT VIEW SUPPORT IF THE MULLION CANNOT BE CORRECTED!

4.2 Determine the location for the Controller

CONSULT THE SYSTEM DESIGN. CONTROLLER LOCATION WILL BE PREDETERMINED

4.2.1 Verify the location to mount the Display Controller. The controller must be within the 3m cable length to the View Display™. The Controller must be thermally connected to a metallic (thermally conducting) surface. If no thermally conducting surface is available, utilize the available heat sink mounting kit (VDS-CMK). **Verify that the cables will easily connect in the proposed location.**

4.2.2 Mark the location for the Controller, but DO NOT DRILL.

4.3 Determine the location of the Power Hub

CONSULT THE SYSTEM DESIGN. POWER HUB LOCATION WILL BE PREDETERMINED, AS WILL THE CABLE LENGTHS

4.3.1 Verify the location to mount the Power Hub. The Power Hub must be within the power cable length to the View Display™ Controller. The Power Hub must have the minimum clearance as outlined in section 1 for cable connections and airflow.

4.3.2 Mark the location of the Power Hub, but **DO NOT DRILL** pilot holes.

4.4 Mounting Bracket Pilot Holes

4.4.1 Use Mounting Bracket Drill Template (010-101850). The template shall be aligned so that the pins on the template are butted to the edge of the mullion. Position the template so that it is centered in the opening by measuring the distance from the right and left end of the

template to the adjacent mullion using digital calipers. Clamp the template in place once aligned.

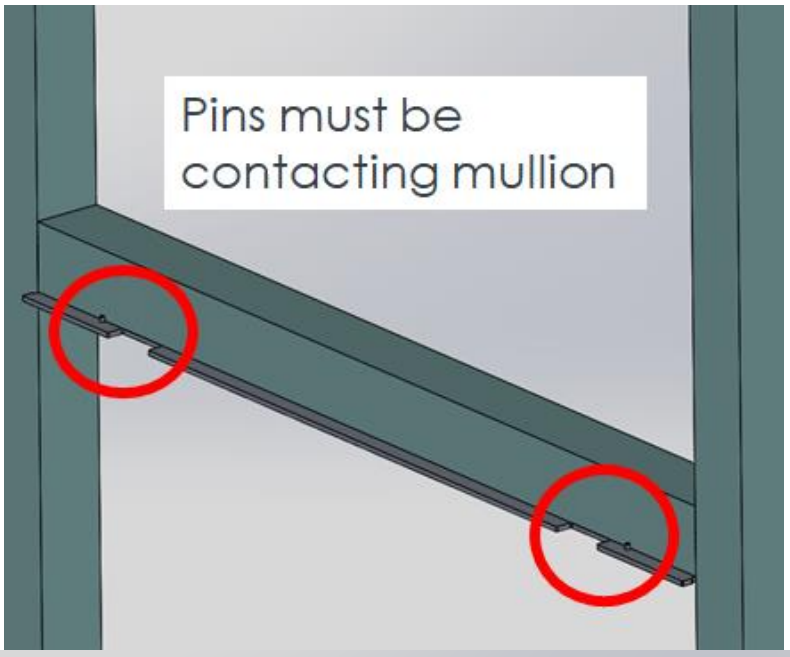

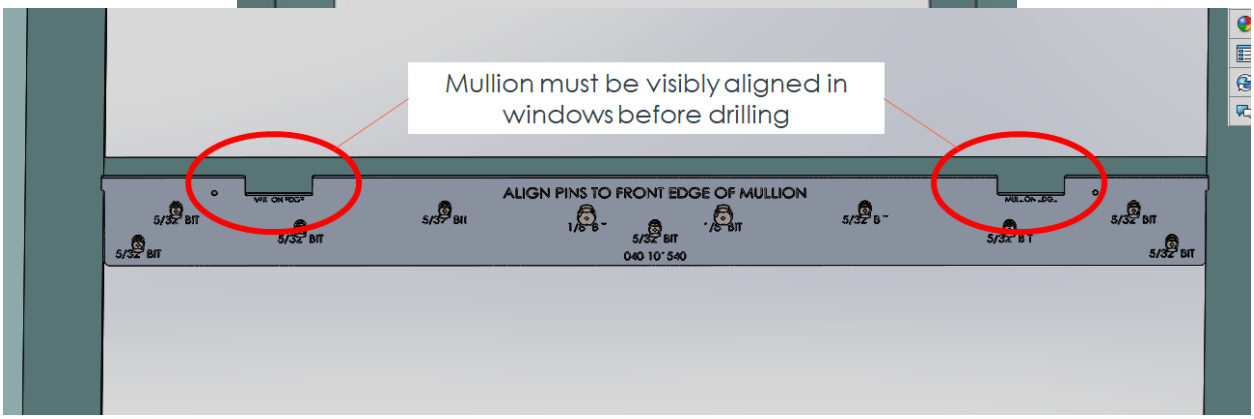

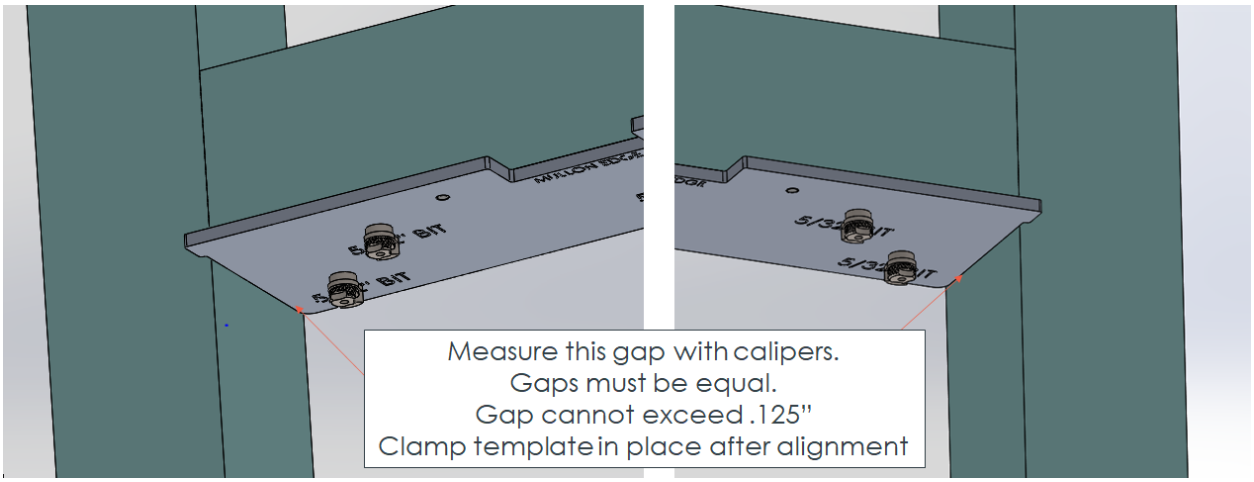

4.4.2 **<u>Verify that the template didn't move when clamped</u>**. Using a 5/32 drill bit, drill 9X pilot holes for #10-32 self-tapping screws. (Template is labeled for 5/32 drill bit)

4.4.2.1 If the design calls for the cables to be routed through the middle of the mullion, drill the 2X ⅛" holes in the middle of the template. Holes are clearly marked.

4.4.3 Unclamp and remove the template after all holes are drilled.

4.4.4 Ensure that the mounting holes are fully deburred so that mounted hardware will mate flush.

4.5 Trim Kit and Cable Routing Holes

The Trim Kit configuration depends on the design of the installation. Trim Kits will come with work instructions that are configuration specific. For the purposes of this procedure, a Single Display will be used as an example.

4.5.1 Place the Trim Drill Template (010-101849) on mullion where the trim will be installed. This surface is perpendicular to the mullion that was drilled for the mounting bracket.

4.5.2 Verify the location that the cables will be run per the System Design. This location will vary depending on the location of the Controller and the Power Hub.

4.5.3 The template shall be aligned so that the pins on the template are butted to the edge of the mullion. The template shall be aligned so that the template is butted up against the mullion drilled for the mounting bracket. Clamp the template in place once aligned. NOTE: The mullion should be visible and aligned to the opening labeled MULLION on the template.

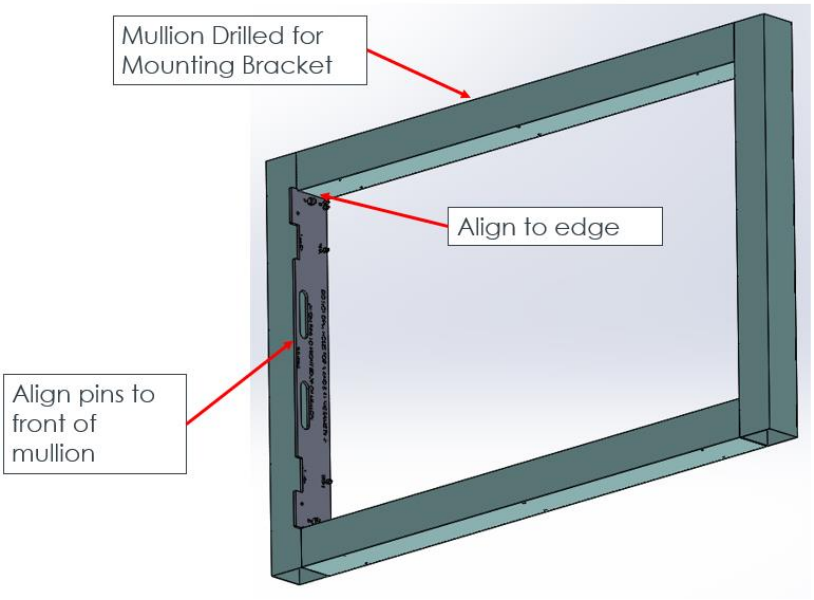

4.5.4 Verify that the template didn't move after clamping. Using the #47 drill bit supplied in the trim kit, drill the holes labeled TRIM on the template.

4.5.5 Using the #47 drill bit, drill the small holes on the other end of the surface that was drilled for the mounting bracket. These will be labeled A or B, depending on the location with respect to the mounting bracket mullion holes.

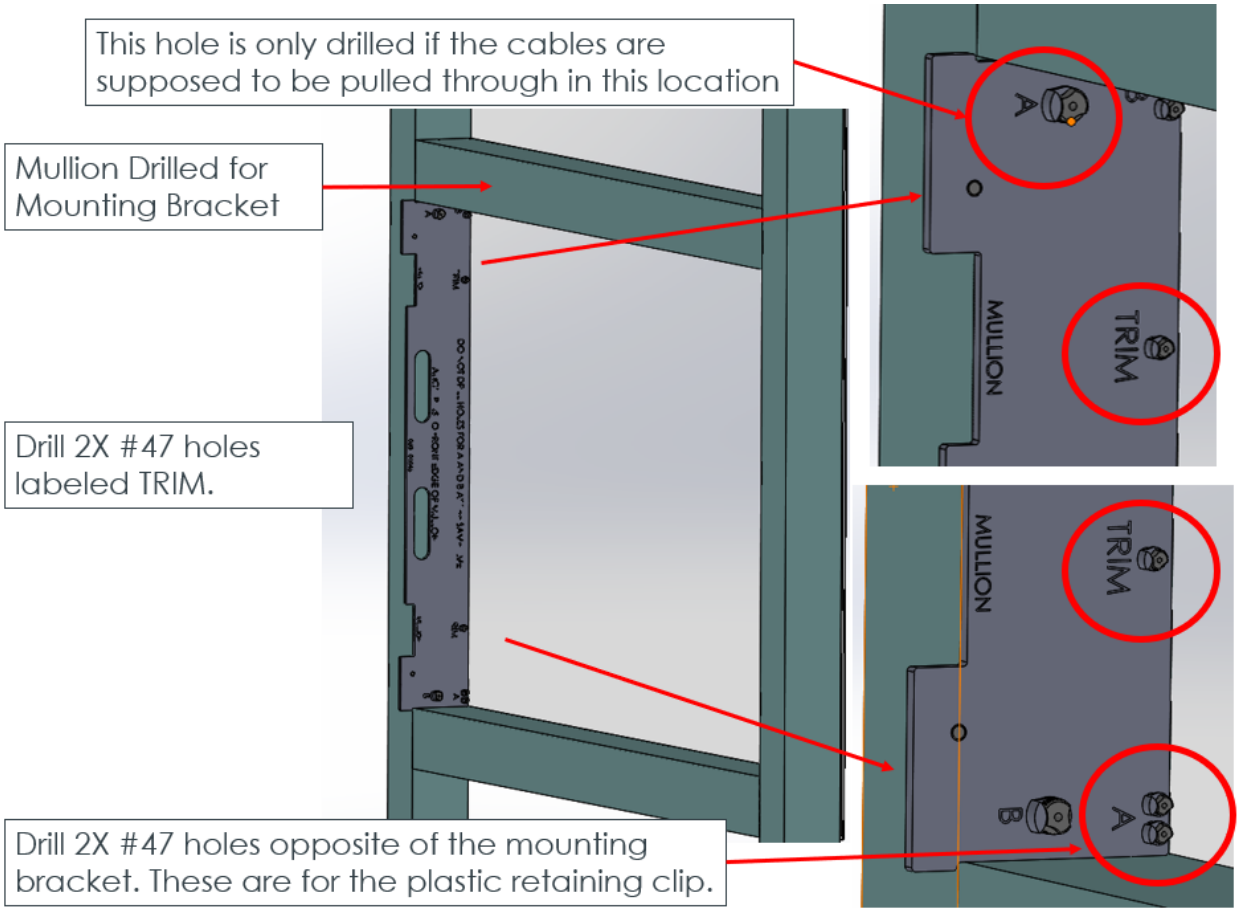

4.5.6 If the template is on the side where the cables will come through the mullion, drill the large drill bushing with ⅛" drill bit.

4.5.6.1 If the holes labeled "A" were drilled for the clamp, then drill ⅛" hole labeled "A"+.

4.5.7 Remove the template and place it on the opposite mullion and repeat steps 4.5.1 through 4.5.6. If the holes labeled “A” were drilled previously, then the holes for “B” will be drilled.

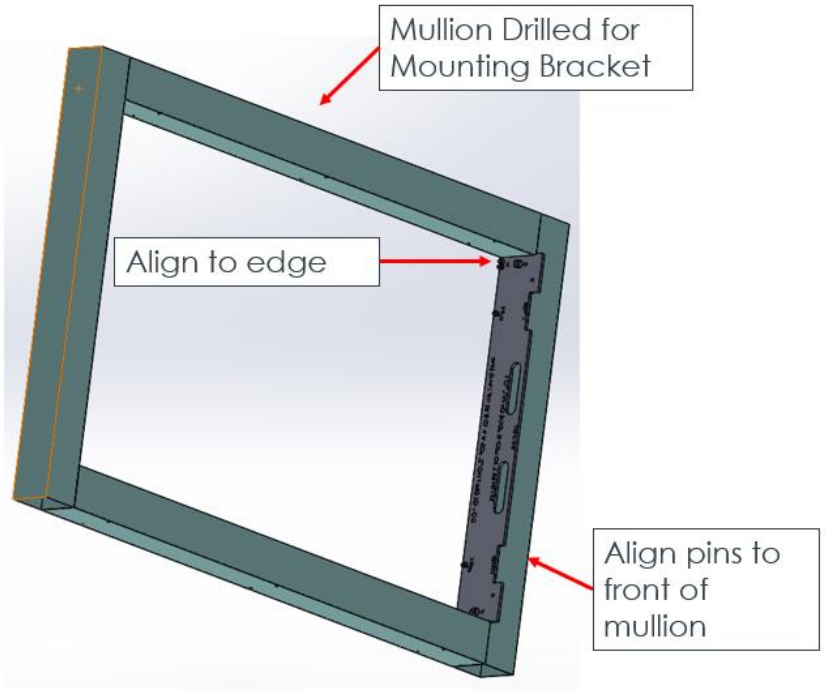

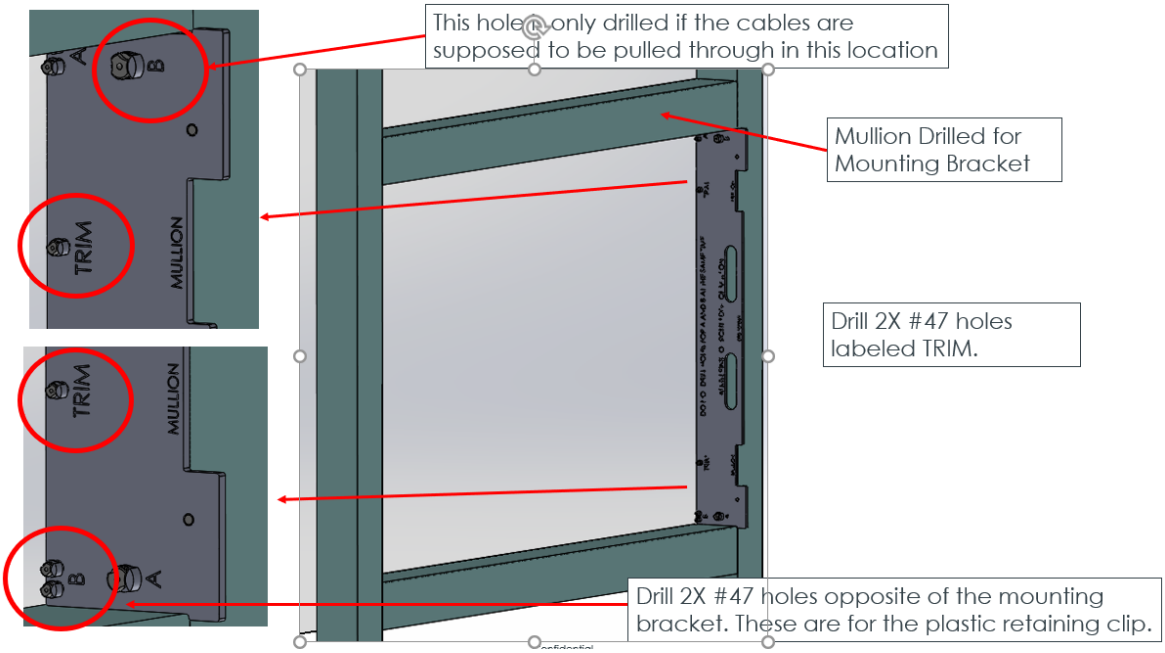

4.5.8 Move the template to the LONG SIDE that wasn't already drilled for the mounting bracket. The template shall be aligned so that the pins on the template are butted to the edge of the mullion. Align the template so it is contacting the SHORT SIDE. Clamp the template in place once aligned. NOTE: The mullion should be visible and aligned to the opening labeled MULLION on the template.

4.5.9 Verify that the template didn't move after clamping. Using the #47 drill bit supplied in the trim kit, drill the holes labeled TRIM on the template.

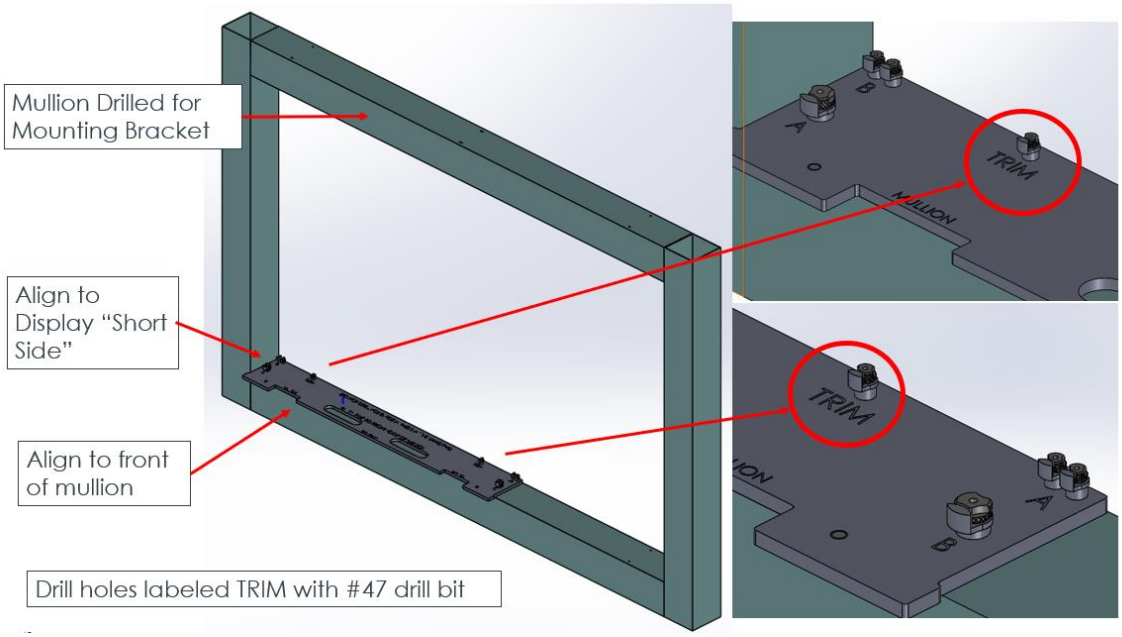

4.5.10 Un-clamp and move the template so it is aligned with the other side of the opening. The template shall be aligned so that the pins on the template are butted to the edge of the mullion. Align the template so it is contacting the SHORT SIDE. Clamp the template in place once aligned. NOTE: The mullion should be visible and aligned to the opening labeled MULLION on the template.

4.5.11 Verify that the template didn't move after clamping. Using the #47 drill bit supplied in the Trim Kit, drill the hole labeled TRIM on the template that's closest to the SHORT SIDE mullion. DO NOT DRILL THE MIDDLE HOLE.

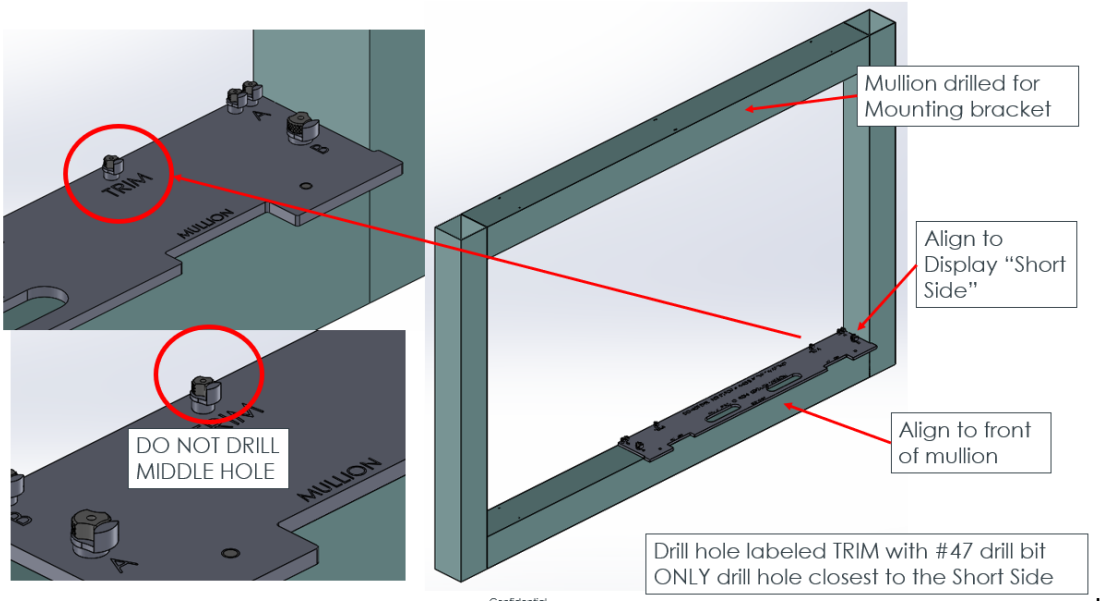

4.5.12 Ensure that the mounting holes are fully deburred so that mounted hardware will mate flush.

4.6 Route Display to Display Controller Interconnect/Prepare Mullion for Cables

4.6.1 Verify the approximate locations of the Controller and the Power Hub. Consult the System Design for this location.

4.6.1.1 Verify the location to mount the Display Controller. The unit must be within the 3m cable length to the View Display™.

4.6.1.2 Verify the location to mount the Power Hub. The Power Hub must be within the cable length to the View Display™ Controller. Mark the Location but DO NOT DRILL

4.6.2 Prepare the cable path by creating access holes from the location of the Display Controller o the mullion where the display will be mounted. View recommends using the vertical mullions as the primary cable path. To create access for the cables to exit, cut-outs are made in the vertical mullion.

Refer to the interconnect diagram provided for system design and cable layout.

4.6.2.1 Vertical Mullion Cable Routing: This pilot hole should have been drilled when the trim and the plastic retaining clip pilot holes were drilled. Use the provided

drill template to verify. Then use a step drill bit to make the 1-1/8" hole for the cables.

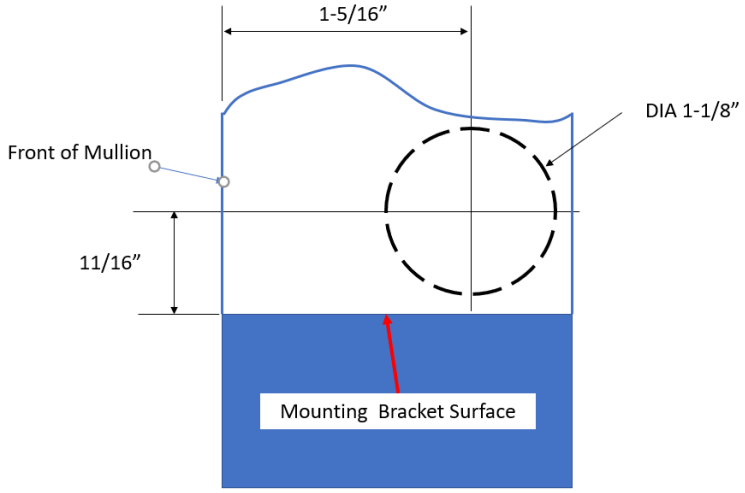

4.6.2.2 Horizontal Mullion Cable Routing: The pilot holes should have been drilled when the mounting bracket pilot holes were drilled. If not, use the mounting bracket template and drill the ⅛" pilot holes that are clearly marked on template. Then use a step drill bit to make the 1-1/8" hole for the cables.

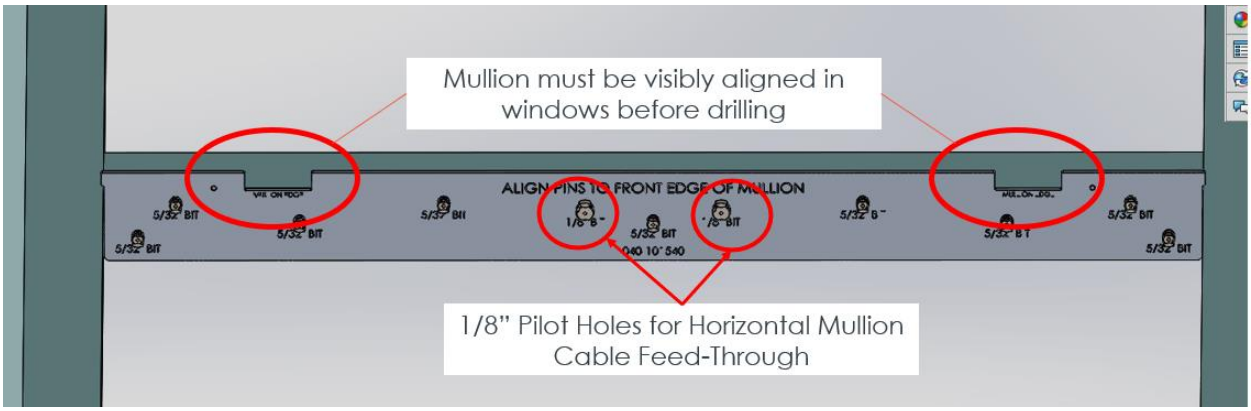

4.6.3 Deburr the cut-outs and install the provided edge protection grommet to prevent cutting or damaging the cables during installation.

4.7 Route the cables through the mullion

4.7.1 As a rule, the cables should be pulled FROM the Controller location TO the Display. Pull and route the 4 signal and 2 power cables from the Display Controller to the View Display™. Use caution and extra protection for the connectors to prevent damage during routing. Utilize a suitable nylon fish tape tool or a string and a chain, to support and protect the connectors from strain and abrasion. **Cover the connectors with a poly bag or similar material before applying tape to protect the connectors from damage from the adhesive.**

4.7.2 Carefully MEASURE and mark the cable names on a piece of painter's tape using the table below. Arrange, and secure the cables to the mullion with painters' tape temporarily so that the cables are out of the way while the mounting plate is installed.

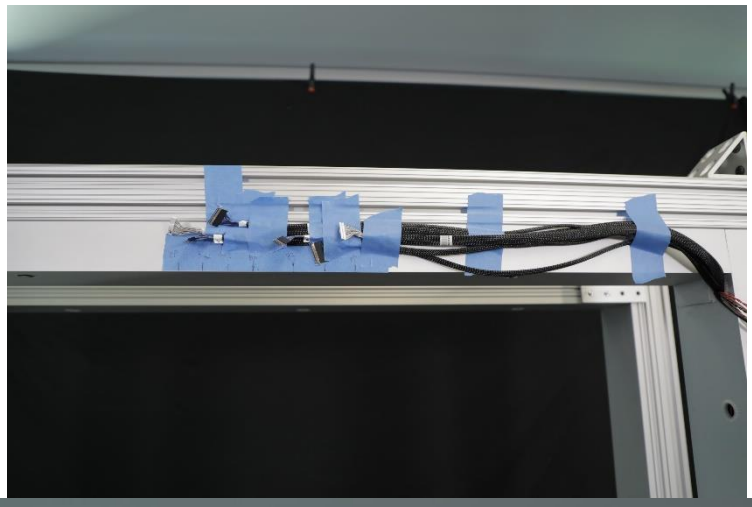

Cable Name	LENGTH from mullion if coming from viewers RIGHT	LENGTH from mullion if coming from viewers LEFT
PA	29"	20 ½"
1A	28"	22"
1B	26 ¾"	23 ½"
2B	23 ½"	26 ¾"
2A	22"	28"
1A	20 ½"	29"

4.7.3 Route the 12V Fan Power and Temperature Sensor (Thermocouple) Cables

4.7.4 If Touch Equipped, route the Touch 24V Power and USB cables

4.7.5 Route the 3m Ground Cable from the Display Controller grounding pad to the Display grounding pad.

4.8 Install Trim Kit and Latch

The Trim Kit configuration depends on the design of the installation. Trim Kits will come with work instructions that are configuration-specific. For the purposes of this procedure, a Single Display will be used as an example.

4.8.1 All installations begin with measuring the opening. It may be necessary to remove some material off the various trim components.

Day Light Opening (DLO) W x H Inches	No. of Displays	Columns	Rows	Portrait	Landscape
49-1/4 x 29-1/8	1	1	1		✔

4.8.2 Measure, cut, and install the short-side trim-bracket . If the trim needs to be cut to fit, cut the side that is aligned to the mounting bracket mullion. This end will be hidden by the beauty cap.

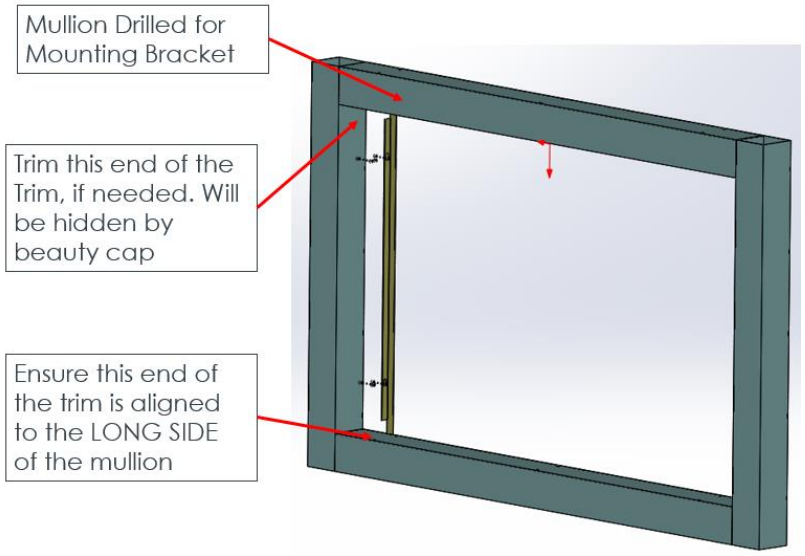

4.8.3 Attach the trim to the mullion using 2X #4 self-tapping screws provided in the Trim Kit.

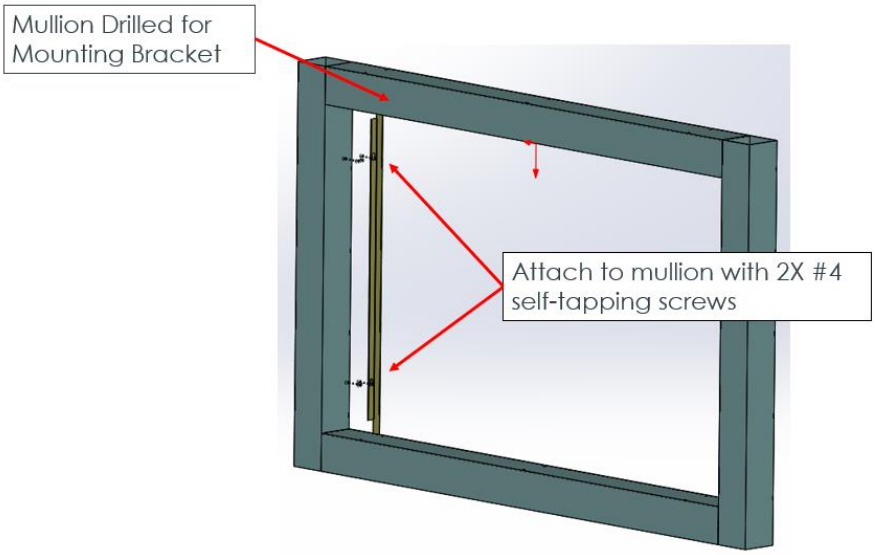

4.8.4 Repeat Steps 4.7.2 and 4.7.3 for the other short-side trim.

4.8.5 Measure, cut, and install the long-side trim-bracket. Measure where the trim will be installed on the long-side mullion opposite where the mounting bracket will be installed. If the trim needs to be cut to fit, cut equal amounts from both ends.

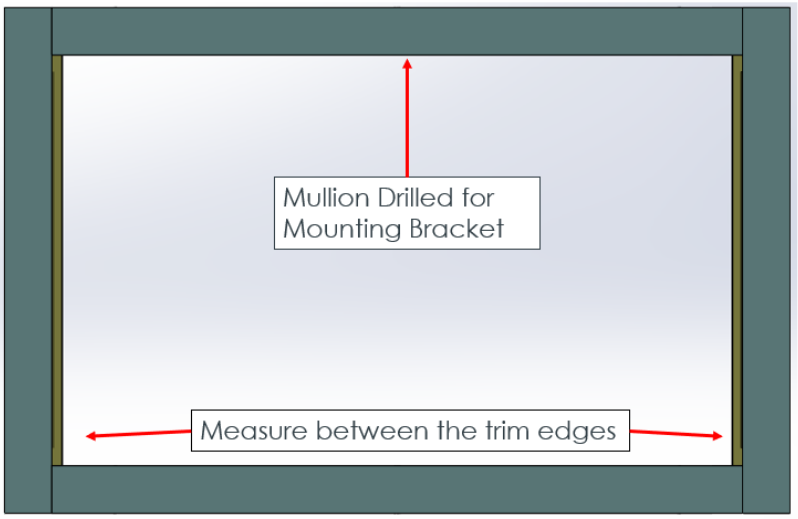

4.8.6 Attach the trim to the mullion using 3X #4 self-tapping screws provided in the Trim Kit.

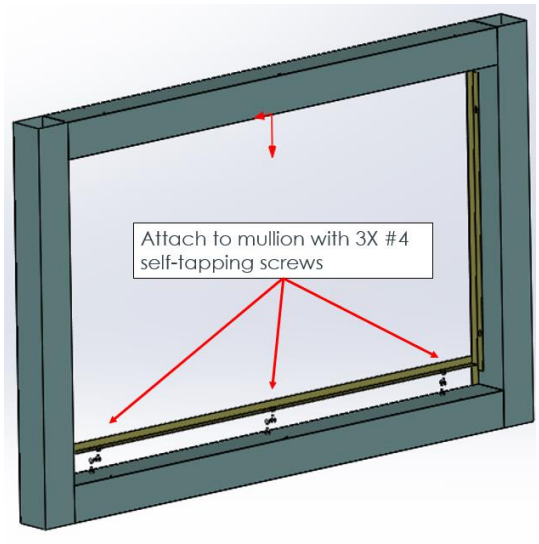

4.8.7 Install retainer clip using 2X #6 screws in pre-drilled holes. The “long” end of the clip should be pointing toward the mullion where the mounting bracket will be installed. The open end of the clip will be facing the front of the mullion. USE CAUTION NOT TO OVERDRIVE THE SCREWS SECURING THE CLIPS. OVERDRIVING THE SCREWS WILL CAUSE THE PLASTIC TO BREAK. USE A LOW TORQUE/CLUTCH SETTING ON THE DRILL TO START THE SCREW, BUT FINISH INSTALLING USING A #$2 PHILLIPS HAND SCREWDRIVER.

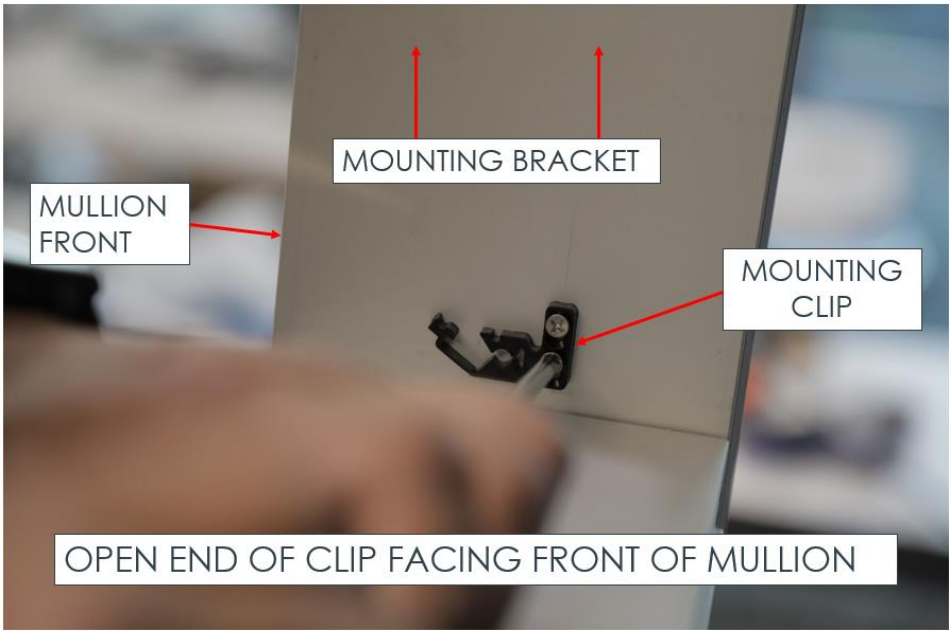

4.9 Install Mounting Bracket

4.9.1 Bracket Preparation:

4.9.1.1 Remove the bracket from packaging. Remove the sheetmetal cable guide cover. Set aside the cover with screws.

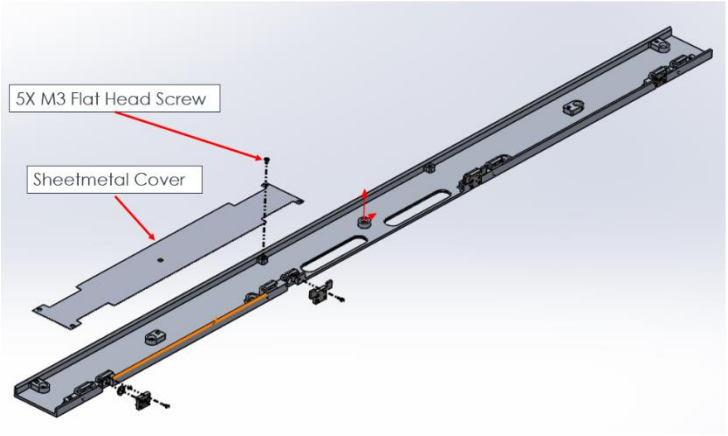

4.9.1.2 Remove 4X retaining plates. NOTE: End plates have gaskets.

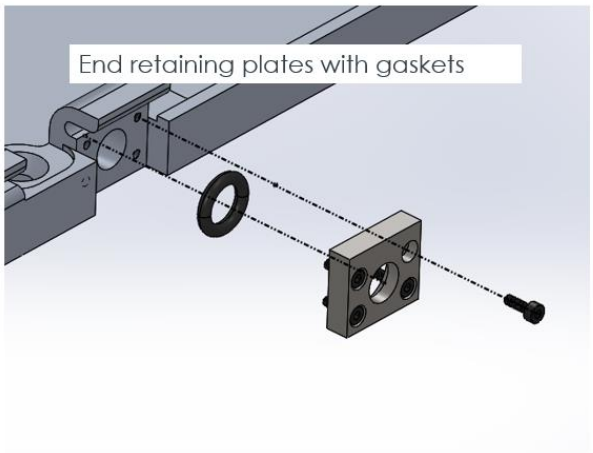

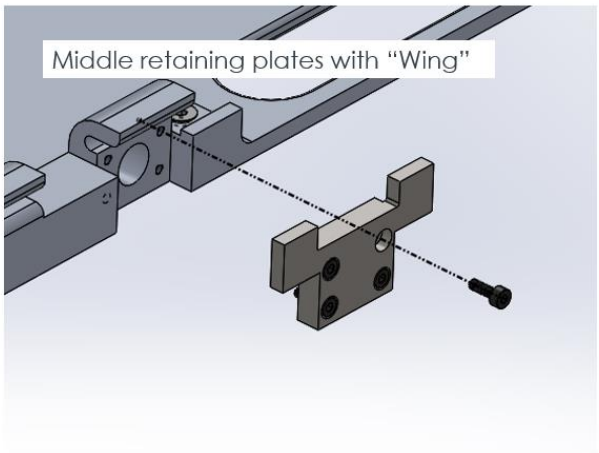

4.9.2 Place the mounting plate into position over the pre-drilled holes in the mullion. Secure the mounting plate with 10ea #10 self-tapping flat head screws. TORQUE SETTINGS ON DRILLS VARY! USE 80% TORQUE/CLUTCH SETTING ON DRILL!

4.9.3 Carefully arrange ALL cables across the mounting bracket and install the cable guide cover. Cables must be flat and not overlapping. Re-match the connector location and distance marked on the mullion (with tape).

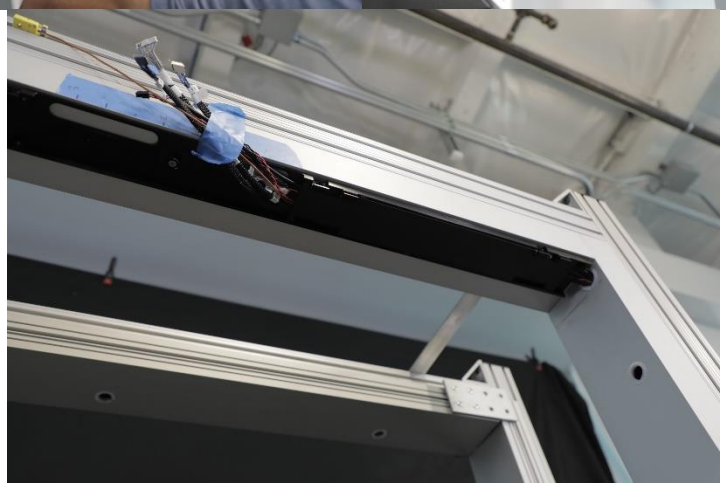

4.10 Display installation

4.10.1 Clean the mullion and the window with >70% IPA and clean dry wipes. Ensure all debris is clear of the mullion and the work area

4.10.2 With two people, carefully lift the Display into place and align the hinge pin of the Display to the hinge slot of the mounting plate. Push the pin into the slot until the ball-detents engage to hold the Display in place.

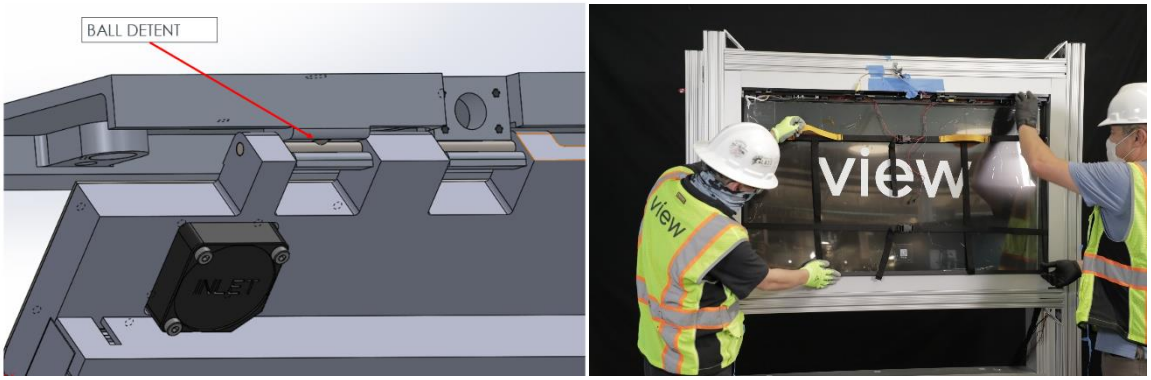

4.10.3 Rotate the Display to the closed position and verify that the retainer clips engage fully. Snap the retainer clips in place to secure.

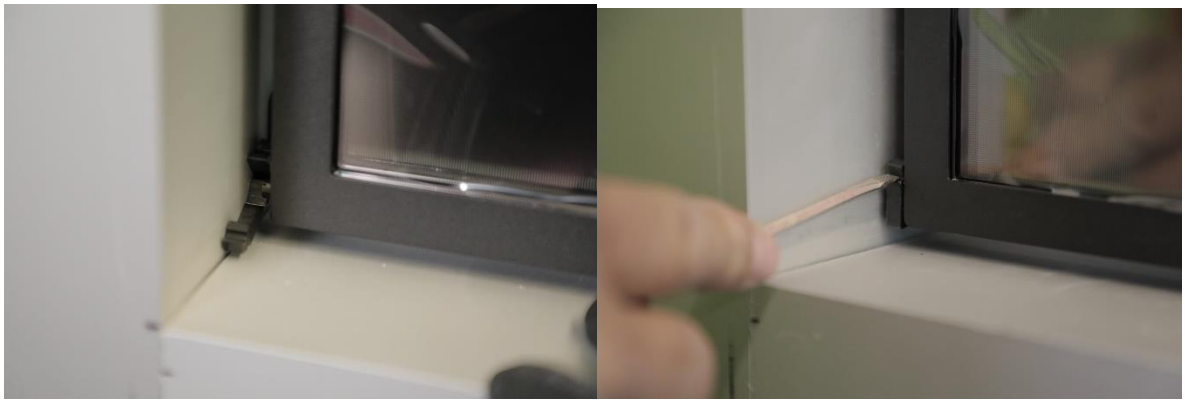

4.10.4 Install the retaining plates on the outer hinge pins.

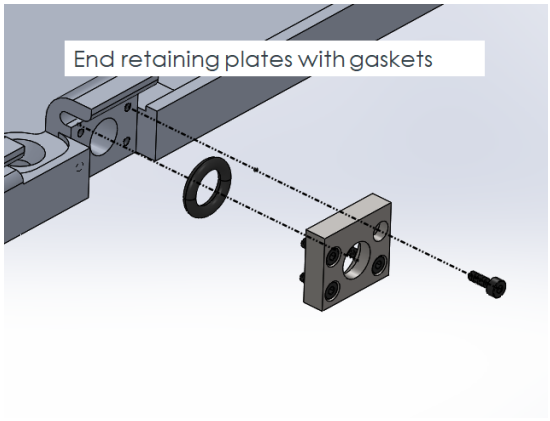

4.10.5 Install the retaining plates on the inner hinge pins.

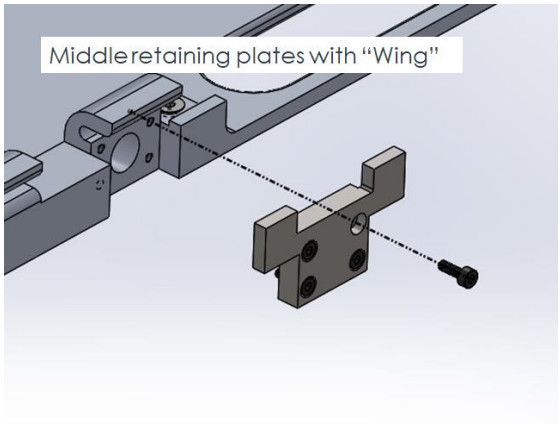

4.11 Connect the cables to the Display

PRIOR TO BEGINNING THIS PORTION OF THE PROCEDURE, IT IS IMPERATIVE THAT THE COLLEAGUE MAKING THE CONNECTIONS IS PROPERLY GROUNDED USING A GROUNDING STRAP. FAILURE TO GROUND CAN RESULT IN DAMAGE TO THE DISPLAY

4.11.1 Connect the cables to the Display one at a time. Each cable is labeled with a corresponding location on the Display and must be connected accordingly. (Note: Carefully engage all connections to avoid damaging the connectors).

4.11.2 Cables 1A, 2A, 2B, and 1B use a latching mechanism. The connection must be made when the latching mechanism is in the upright position. Once the connector is fully seated, rotate the latch until it clicks into place. The latch is secure when it is rotated to be parallel with the connector end.

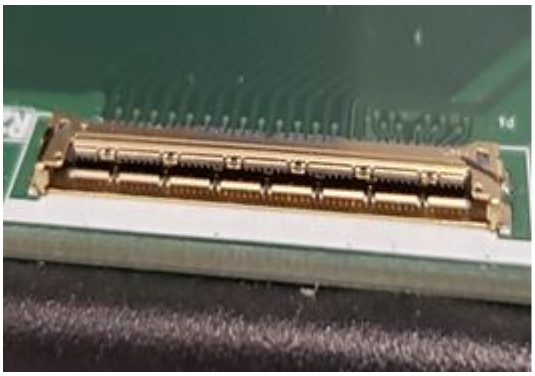

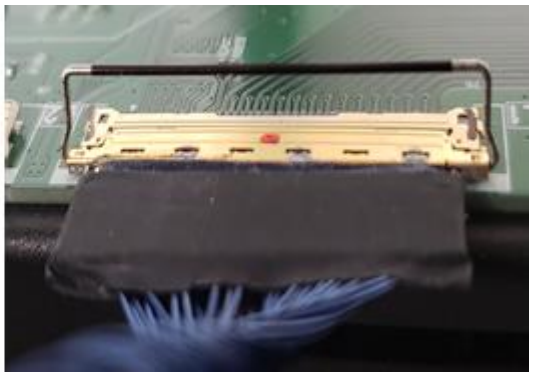

4.11.3 Connect the PA and PB connectors. Align connector key with the socket and GENTLY push the connector into the socket until the latch snaps in place.

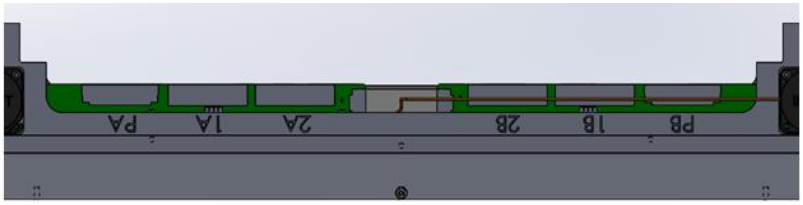

4.11.4 Use an M4 screw to connect the 3m ground cable to the Display. This connection is made where the anodization was masked.

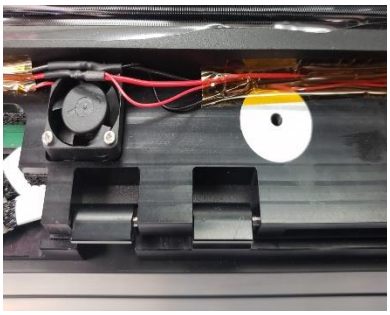

4.11.5 Connect the thermocouple cable to the thermocouple connector on the display. Connect the fan power cable.

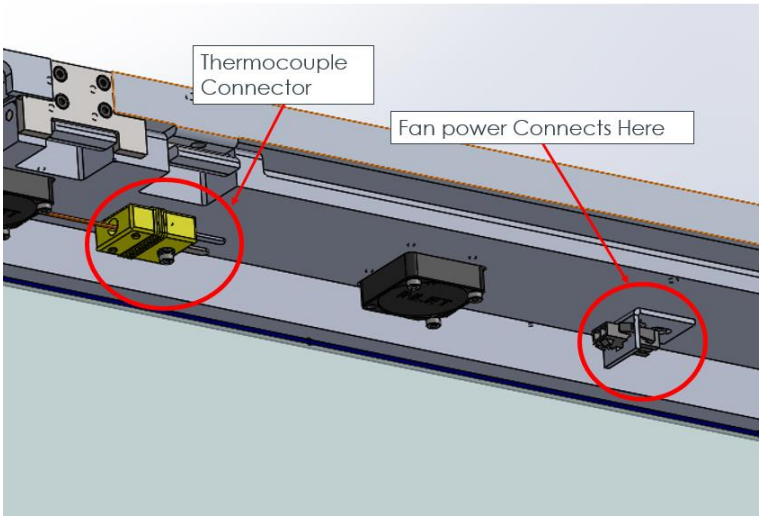

4.11.6 If the unit is touch screen equipped, connect the Touch power and USB cables to the Touch Controller Board. Connectors are hard to see and are between the board and the bracket.

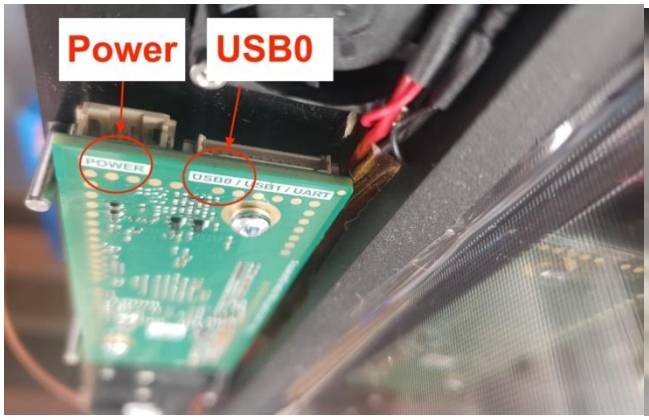

4.11.7 Dress cables to ensure proper strain relief and compact routing.

4.12 Install the Display Controller

4.12.1 Verify that the mounting location of the Display Controller is less than the 3m cable length to the View Display™, and that the cables will easily connect in the proposed location without strain. The location should have been marked prior to the cable install per section 4.2.2

4.12.2 Prior to installing the Display Controller, set the SET ID by using the two rotary DIP Switches on the side. Each Display Controller in the installation must be given a unique SET ID starting with 01. The top left Display should be SET ID 01, and the order should be increasing left to right, then top to bottom.

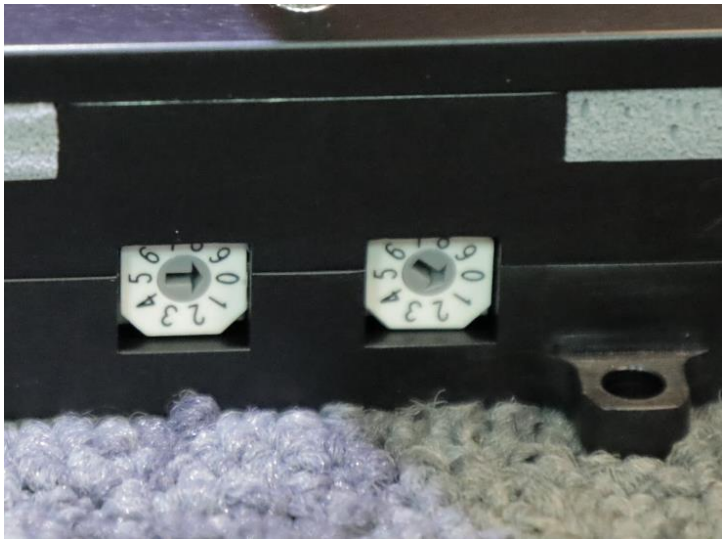

4.12.3 Mullion Mounting

4.12.3.1 Mark the 6 mounting hole locations and drill pilot holes into the mullion using the 1/8” drill.

4.12.3.2 Prior to mounting, prepare and clean the area where the Display Controller will be mounted. Place the thermal interface material provided on the back of the Display Controller prior to placement.

4.12.4 Non-Mullion Mounting using the Controller Mounting Kit (VDS-CMK)

4.12.4.1 Assemble the CMK heat sink and brackets using the supplied screws.

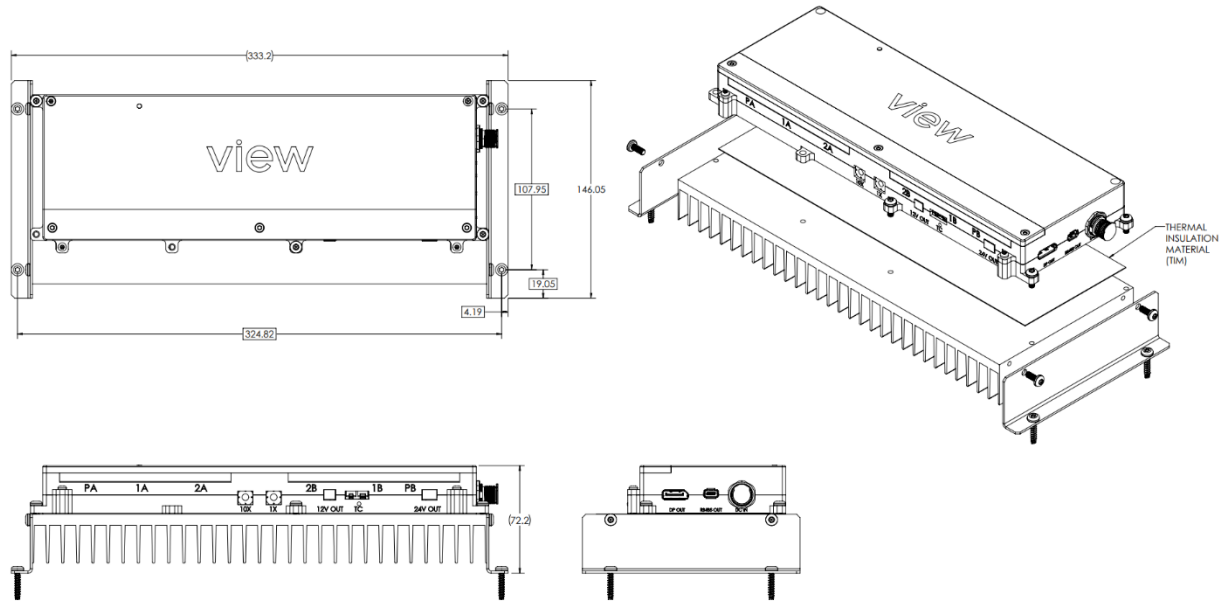

NOTES (UNLESS OTHERWISE SPECIFIED):

1 INTERPRET ALL DIMENSIONING AND TOLERANCING PER ANSI Y14.5M - 1994.

2 PEEL OFF THE 2 SIDES OF TIM BEFORE APPLY ONTO THE CONTROLLER AND HEAT SINK. TIM MATERIAL COMES WITH DISPLAY CONTROLLER.

4.12.4.2 Ensure the mounting location allows the Heat Sink fins to be arranged vertically for proper airflow. Ensure that there are no obstructions for airflow above and below the heat sink. Mark the 4 mounting hole locations and drill pilot holes into the mullion using the 1/8” drill.

4.12.4.3 Prior to mounting, prepare and clean the area where the Display Controller will be mounted to the heat sink. Place the thermal interface material provided on the back of the Display Controller prior to placement.

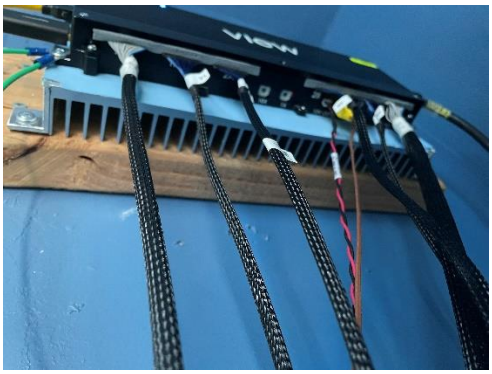

4.12.5 Secure the Controller to the installation location using the mounting tabs on the Display Controller and the M4 self-tapping screws included in the hardware kit.

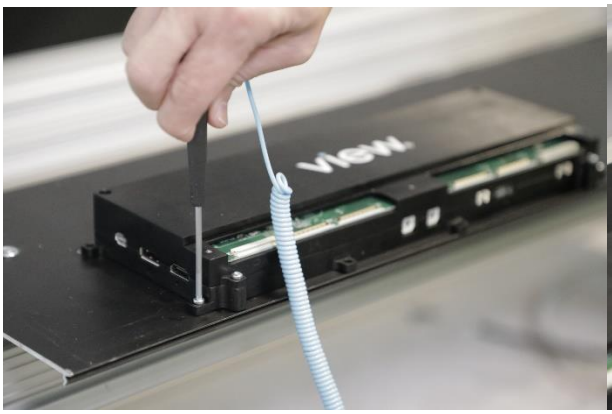

4.12.6 Connect the 8m grounding cable to the Display Controller grounding ear and a suitably earth-grounded point in the installation.

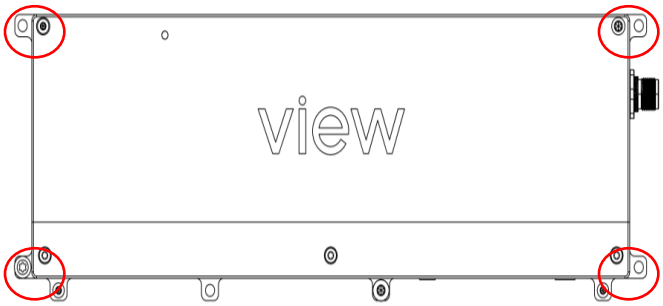

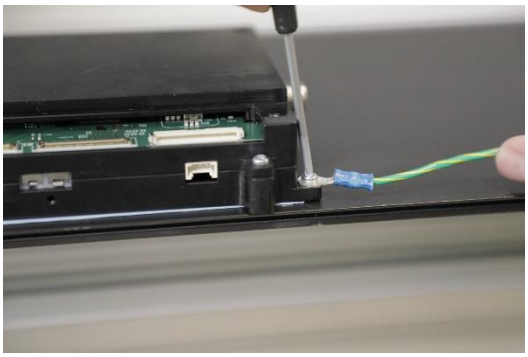

PRIOR TO BEGINNING THE NEXT PORTION OF THE PROCEDURE, IT IS IMPERATIVE THAT THE COLLEAGUE MAKING THE CONNECTIONS IS PROPERLY GROUNDED USING A GROUNDING STRAP. FAILURE TO GROUND CAN RESULT IN DAMAGE TO THE DISPLAY

4.12.7 Remove the Controller access door by removing the 3 screws holding it in place using a T3 Torx Bit

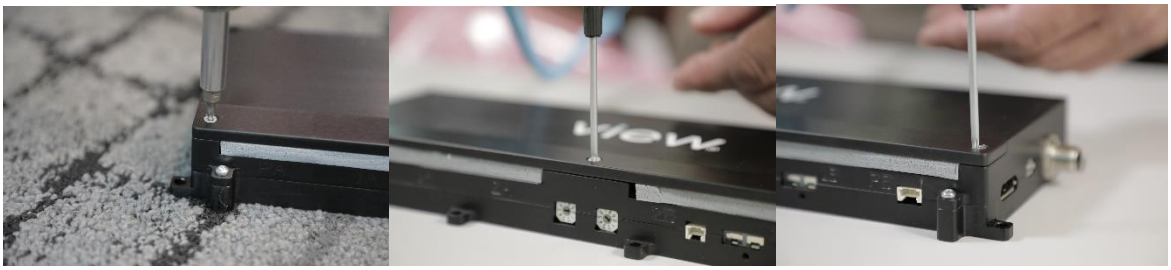

4.12.8 Connect the cables to the Display Controller. Each cable is labeled with a corresponding location on the Controller. (Note: Carefully engage the connection to avoid damaging the connectors).

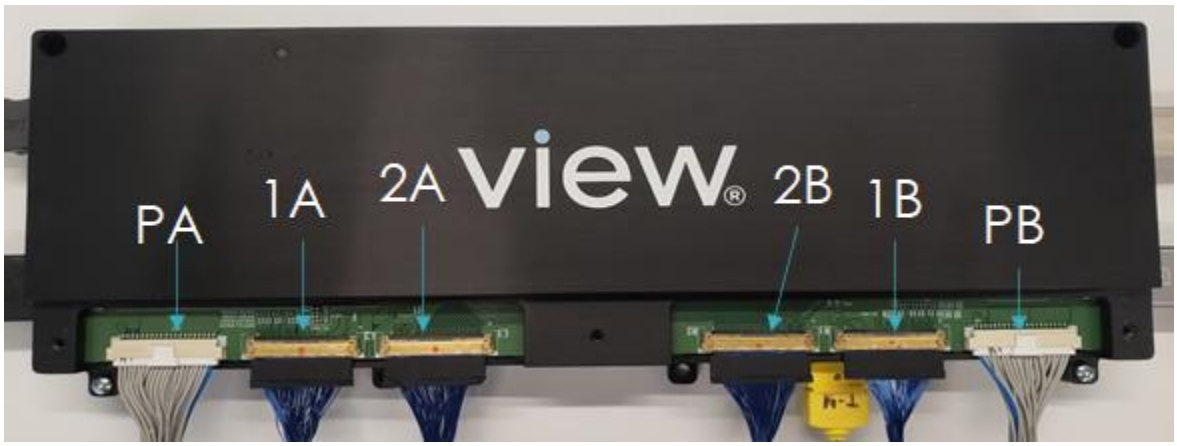

4.12.8.1 Cables 1A, 2A, 2B, and 1B use a latching mechanism. The connection must be made when the latching mechanism is in the upright position. Once the connector is fully seated, rotate the latch until it clicks into place. The latch is secure when the it is rotated to be parallel with the connector end.

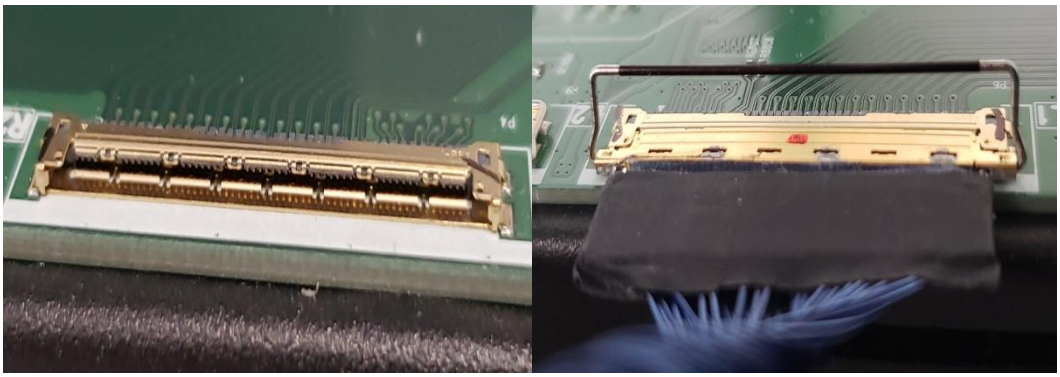

4.12.8.2 Connect the PA and PB connectors. Align connector key with the socket and GENTLY push connector into the socket until the latch snaps in place.

4.12.9 Re-install the Controller access door.

4.12.10 Connect the 12V fan power and thermocouple cables to the Display Controller.

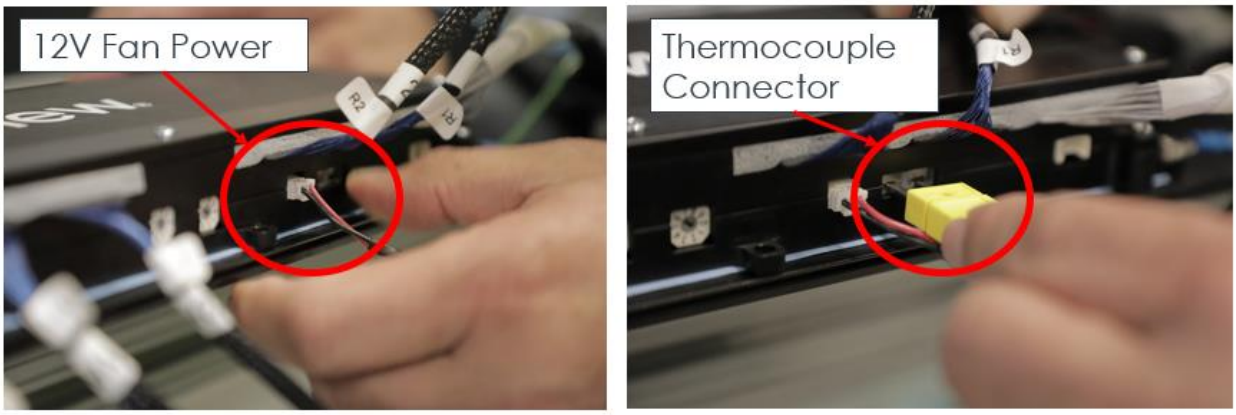

4.12.11 Connect the 24V Touch power cable to the Display Controller if Touch Enabled.

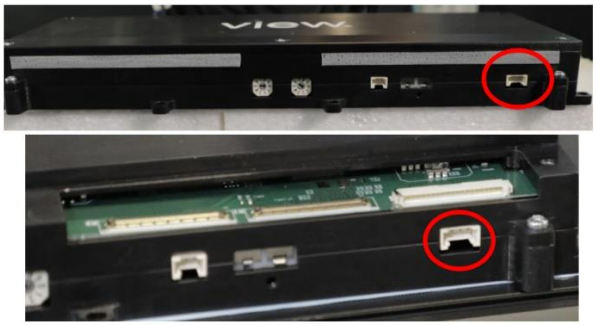

4.12.12 Route the video input cable (HDMI and / or DP) to the Display Controller. This connection is provided from the Content Management System (CMS) that the customer selected.
NOTE: Active cables will have an orientation for the Signal Source and Destination. Pay attention to the end of the cable that is being connected.

4.12.13 If the installation will be a Video Wall using the View Display™ Video Wall feature, interconnect the DP OUT of the first Controller to the DP IN of the next until all Displays in the video wall are connected.

4.12.14 Route the RS485 Comm cable from the Power Hub to the Display Controller. If multiple displays are used in the installation, connect the RS485 OUT of the first Controller to the RS485 IN of the next until all displays in the installation are connected.

4.13 Installing the 4 Output Power Hub (PS4)

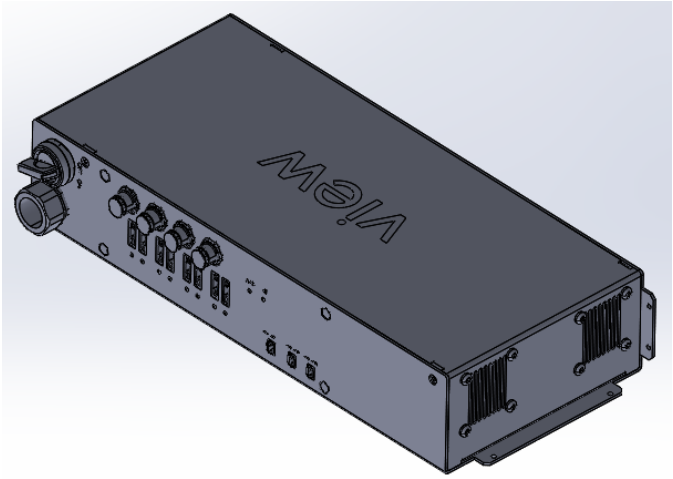

4.13.1 Verify the location to mount the Power Hub. Verify mounting hole locations using the tabs on the outside of the Power Hub as a template. NOTE: The Power Hub must be within the provided power cable length to the View Display™ Controller. Consult the system design for details of the cable lengths.

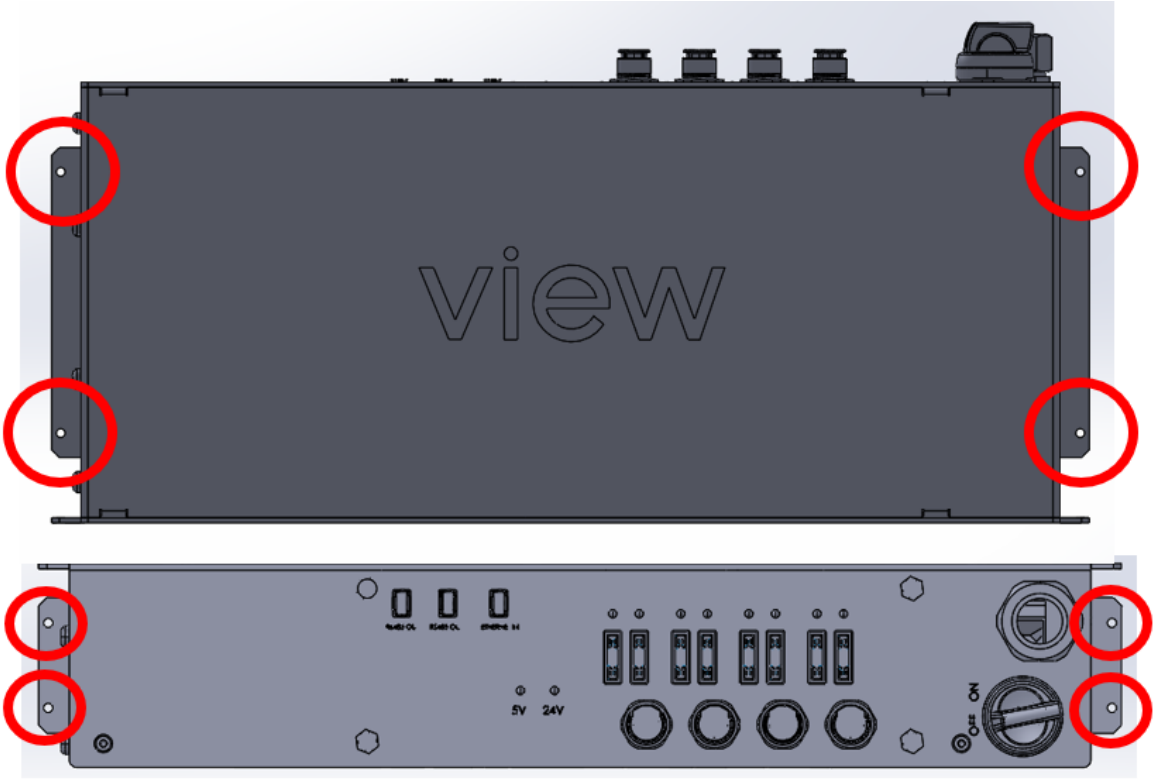

4.13.2 Drill the 4X mounting holes using a 1/8” drill.

4.13.3 Secure the Power Hub to the installation location using the 4X mounting holes and the M4 self-tapping screws included in the hardware kit.

4.13.4 Verify that the Power Hub switch is in the OFF position

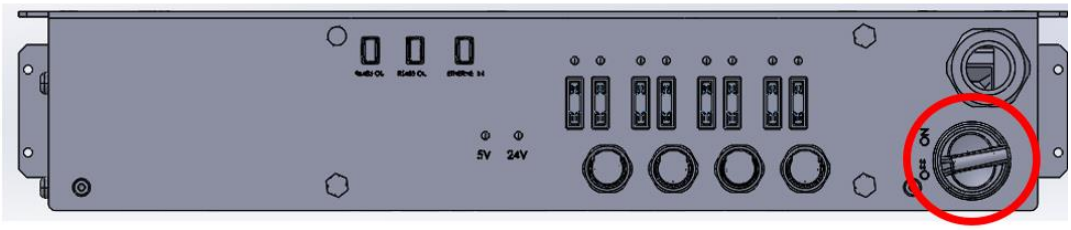

4.13.5 Connect to 4x M12 Connector cables to the matching Display Controller and lock in place.

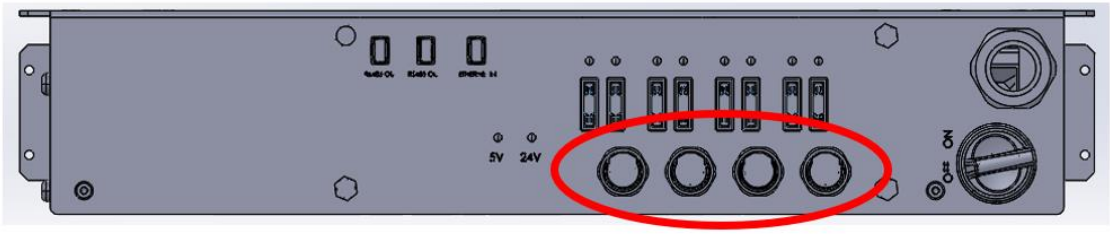

4.13.6 Remove the protective cover from the Power Hub to expose the Terminal Block to connect the power wires.

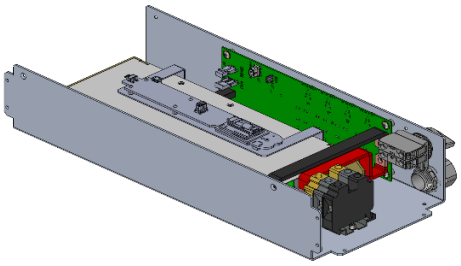

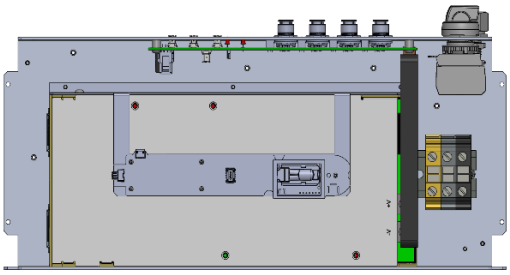

4.13.7 The electrician will connect the Line, Neutral, and Ground that is provided from facilities to the terminal block. (*see schematic for wiring connections*)

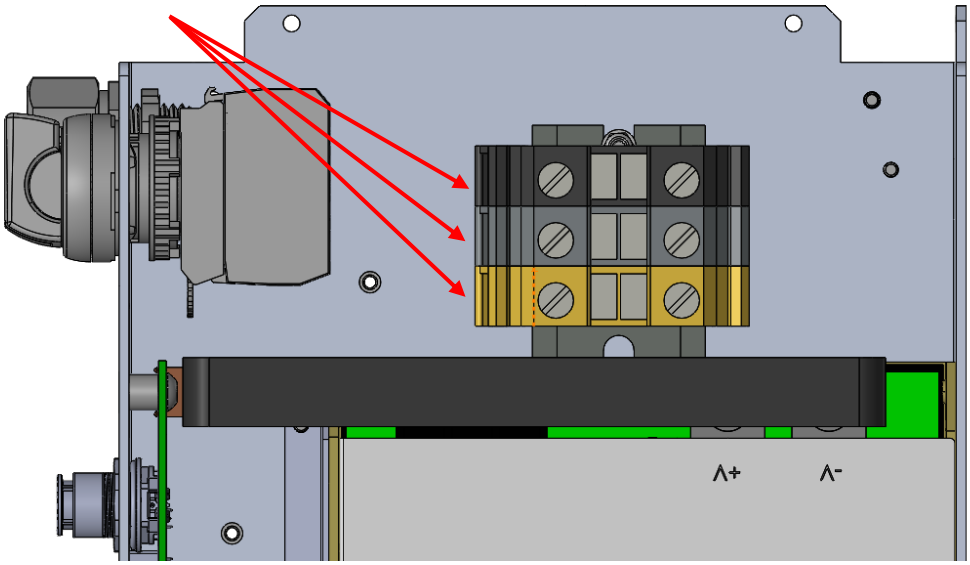

4.13.8 Replace the cover after wiring connection secured.

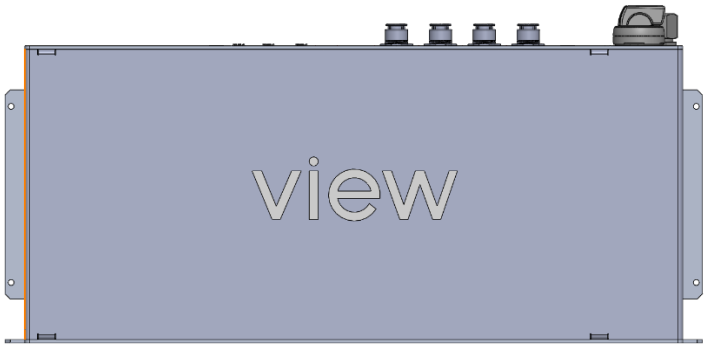

4.14 Installing the 1 Output Power Hub (PS1)

4.14.1 Remove the cover from the Power Hub.

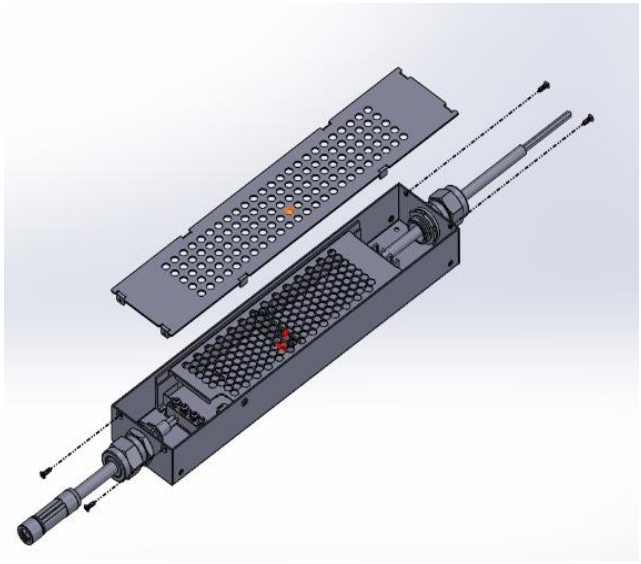

4.14.2 Verify the location to mount the Power Hub. Verify mounting hole locations using the inside the Power Hub as a template. NOTE: The Power Hub must be within the M12 cable length to the View Display™ Controller.

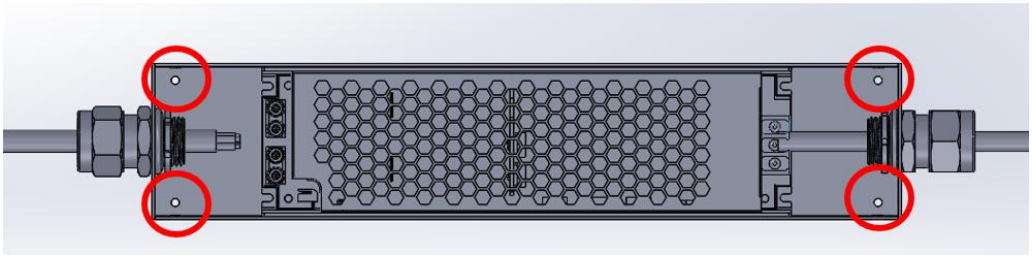

4.14.3 Drill the 4X mounting holes using a 1/8” drill bit.

4.14.4 Secure the Power Hub to the installation location using the mounting holes inside the Power Hub and the M4 self-tapping screws included in the hardware kit.

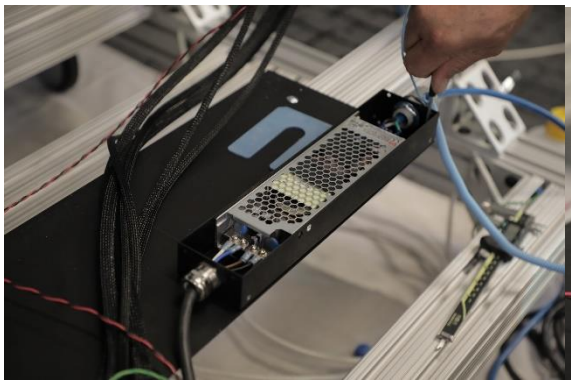
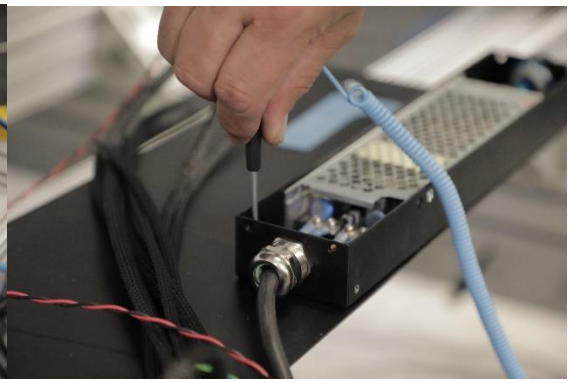

4.14.5 The electrician will connect the Line Neutral and Ground that is provided from facilities to the terminal block.

4.14.6 Install the Power Hub cover.

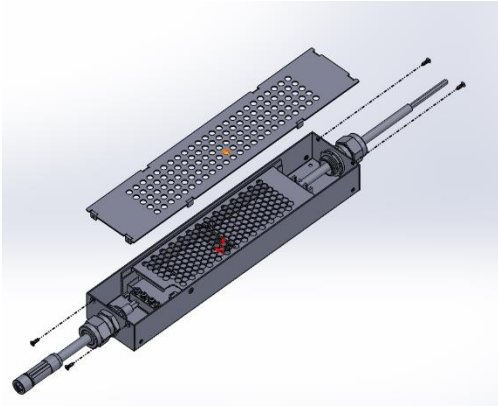
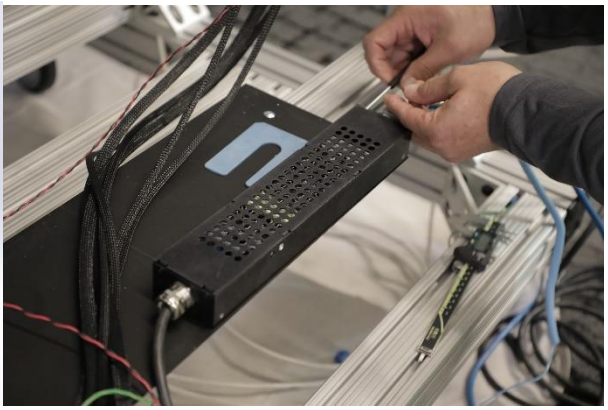

4.14.7 Connect the M12 Connector cable to the Controller and lock in place.

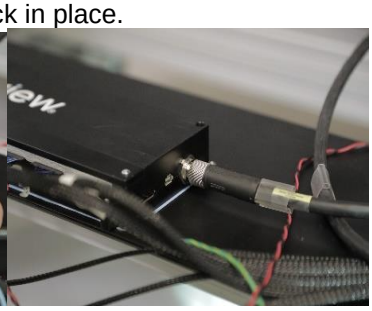

5 Final System Connections (Refer to APPENDIX A)

5.1.1 Ensure the Power Hub Power is off.

5.1.1.1 For the 4 Output Power Hub, keep the power switch in the OFF position.

5.1.1.2 For the 1 Output Power Hub, ensure the AC power circuit is OFF.

5.1.2 Verify that the power cable to the Power Hub M12 connection is secure.

5.1.3 Remove all lock outs from circuit feeding the system power.

6 Connect the Display Controller to the Source Computer (Refer to APPENDIX A)

6.1.1 Connect the HDMI input or DP input from the source computer to the Display Controller. If the installation is a video wall, this connection must be connected to SET ID 01.

6.1.2 For remote control of the Display, connect the COMM cable to the RS485 input. When using the Power Hub, the COMM cable will be routed from the Power Hub RS485 connector to the RS485 connector of the Display Controller with SET ID 01.

6.1.3 For systems using a Customer Supplied CMS with a COMM Connection, connect the CMS RS485 to the Power Hub COMM connection.

6.1.4 For systems using View Net™, connect the View Net™ port to a nearby Network Window Controller or Network Adapter using an VDS-CC-XXX cable (IX to IX PoE network cable). Consult the system design for the details of the cable lengths to use.

6.1.5 For the Touch enabled Displays, connect the USB cable to the source computer. Dependent on setup, the customer may provide a direct connection or provide a USB Hub.

7 Powering on and setting up.

7.1.1 Once all connections are made, enable the power to the circuit and switch the power ON at the Power Hub. The system will boot, and you will see a View logo. The View logo may be upside down. This will be addressed during the setup procedure.

7.1.2 To set up the system, use the View Display™ Installation App.

7.1.3 The View Display™ Manual (QDM-05-000077) contains additional information for maintenance and use.

7.1.4 If the system is Touch enabled, verify that the Touch Controller Board LED shows solid green. Indicator lights are located between the board and the bracket. If the LED is red,

there are possible issues with the connectors. Power down the unit, check the connections to the Touch Controller Board, and power back on.

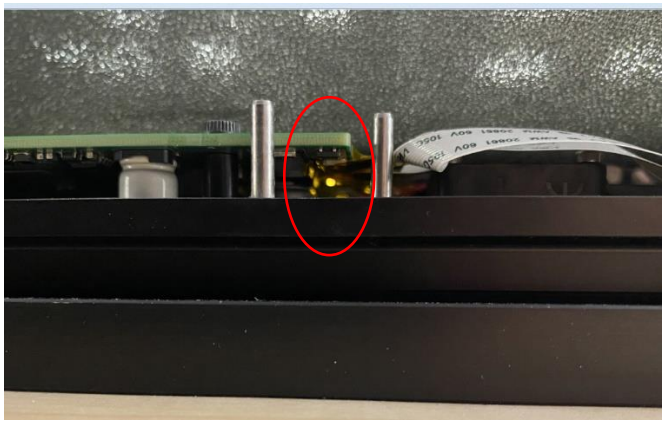

Indicator light shown in image is for demonstration purposes only.

7.1.5 Install the beauty cap, being careful not to pinch any cables. The beauty cap will slide into place by inserting the pins into the holes on the outer retaining plates, and is held in place with friction only.

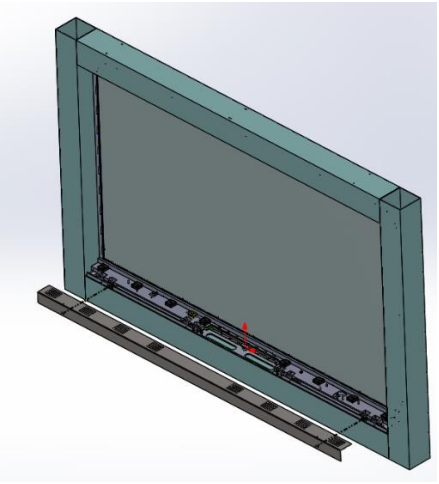

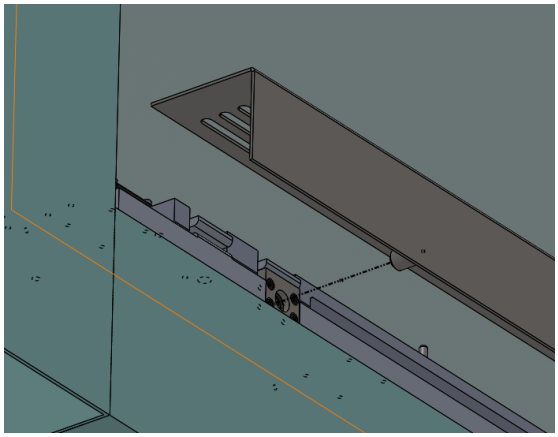

APPENDIX A – INTERCONNECT DIAGRAM & SCHEMATICS

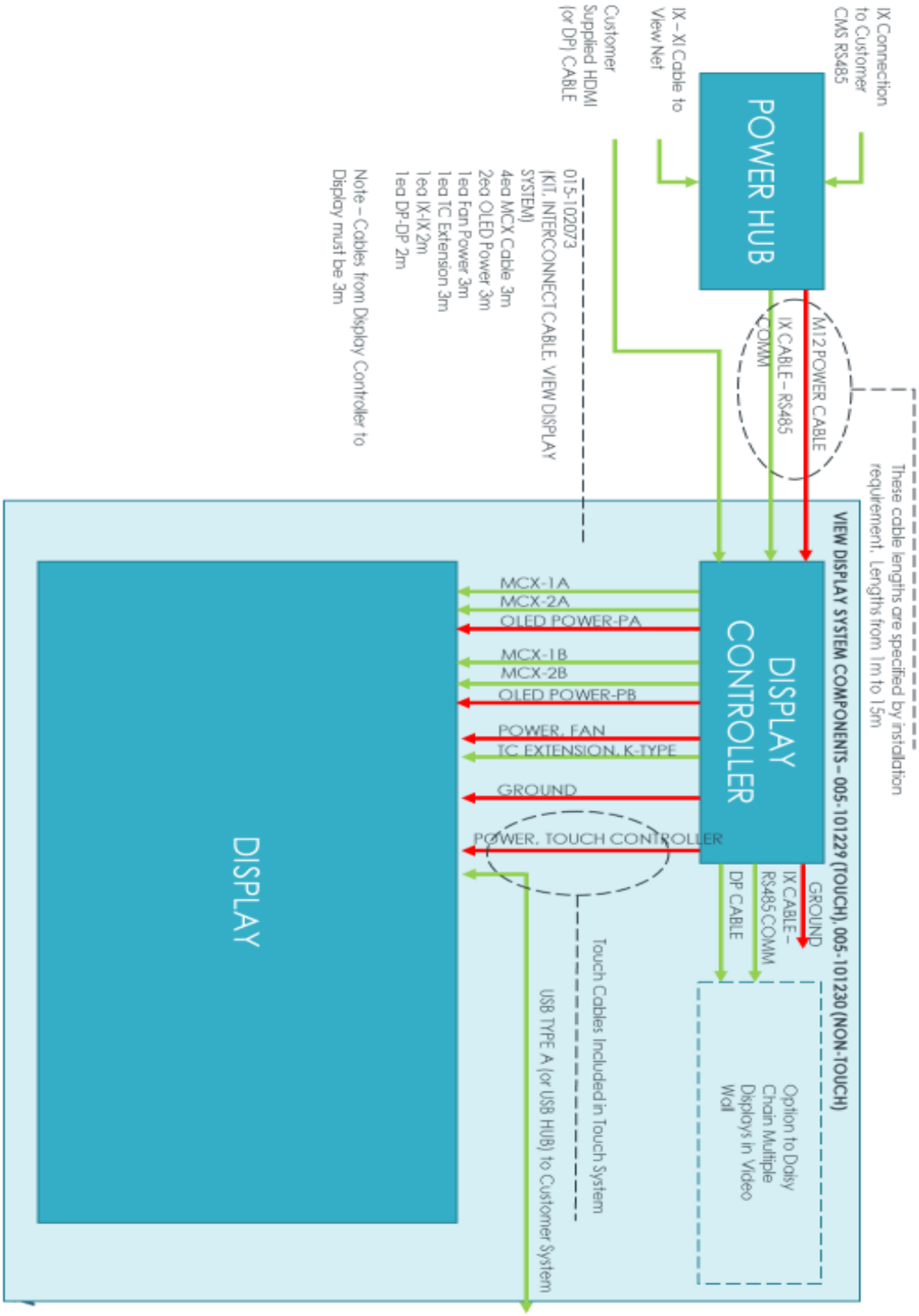

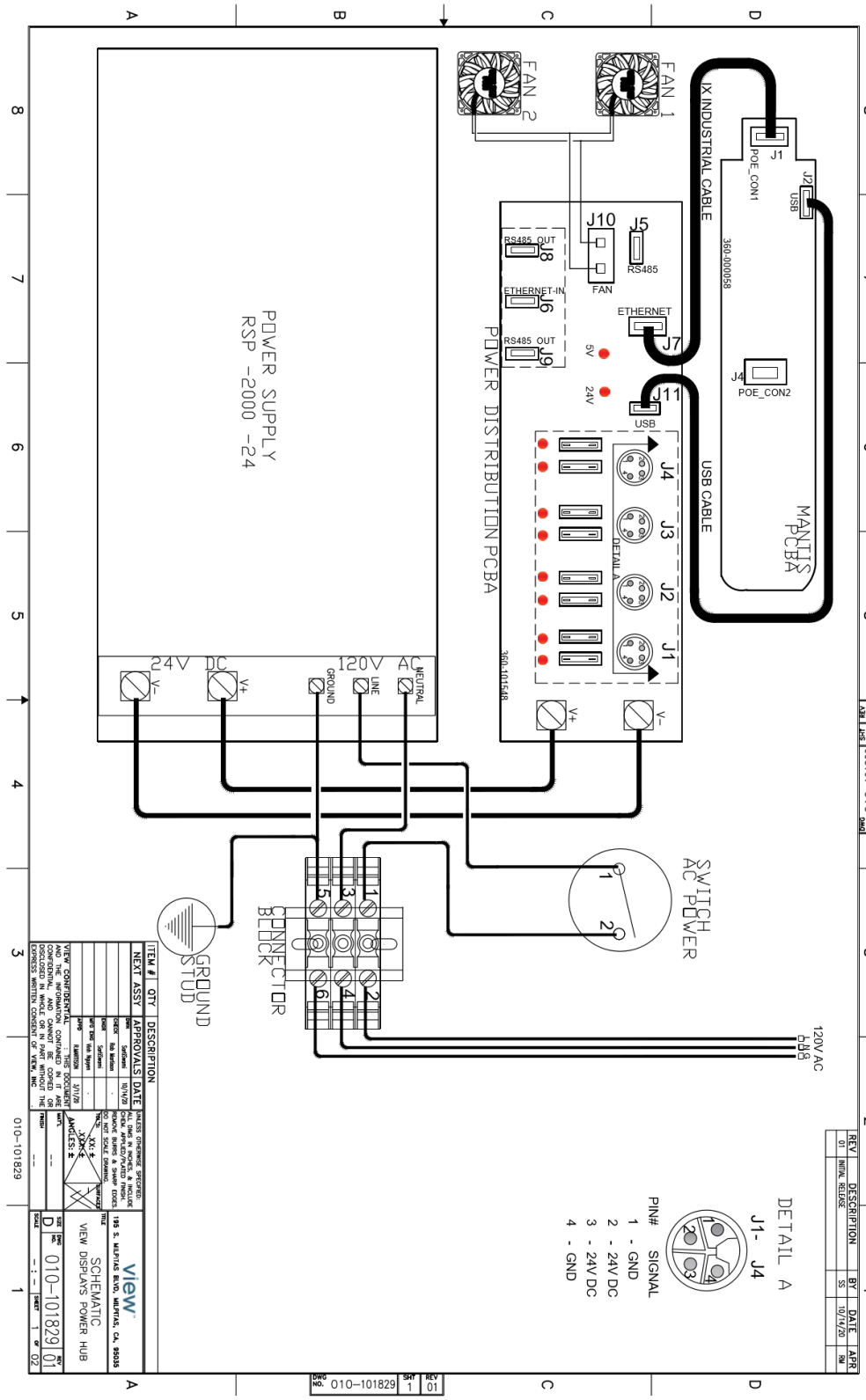
POWER SUPPLY
RSP -2000 -24
24V DC
120V AC
V-
V+
GROUND
LINE
NEUTRAL
FAN 2
FAN 1
POWER DISTRIBUTION PCBA
RS485 OUT
J8
ETHERNET-IN
J6
RS485 OUT
J9
J10
FAN
J5
RS485
ETHERNET
J7
5V
24V
J11
USB
J4
J3
J2
J1
DETAIL A
360-101548
IX INDUSTRIAL CABLE
USB CABLE
J1
POE_CON1
J2
USB
360-000058
J4
POE_CON2
MANTIS PCBA
SWITCH AC POWER
CONNECTOR BLOCK
GROUND STUD
120V AC
DETAIL A
J1- J4
PIN# SIGNAL
1 - GND
2 - 24V DC
3 - 24V DC
4 - GND
REV
DESCRIPTION
BY
DATE
APR
01
INITIAL RELEASE
SS
10/14/20
RM
ITEM #
QTY
DESCRIPTION
NEXT ASSY
APPROVALS
DATE
VIEW CONFIDENTIAL
SCHEMATIC
VIEW DISPLAYS POWER HUB
010-101829
01
010-101829
SHT 1
REV 01